SLV-E170EE/E170EG/E320EE/E470EE/E470EG

RMT-V198/V198B

SERVICE MANUAL

Czechoslovakian Model
Polish Model
Russian Model
SLV-E170EE/E320EE/E470EE
Greek Model
SLV-E170EG/E420EG

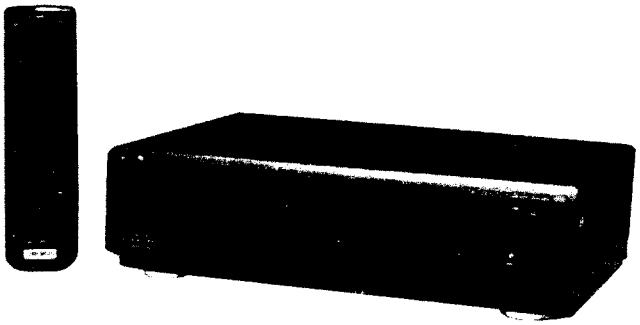

Photo : SLV-E170EE

VHS

H MECHANISM

- **Refer to the SERVICE MANUAL of VHS MECHANICAL ADJUSTMENTS Ⅳ for MECHANICAL ADJUSTMENTS. (9-973-623-11)**

SPECIFICATIONS

System

Channel coverage
- VHF R1 to R12, E2 to E12
- UHF E21 to E69, R21 to R69
- CATV S01 to S05, S1 to S41

RF output signal
- UHF channels 28 to 55

Aerial out
- 75-ohm asymmetrical aerial socket

Inputs and outputs

LINE (TV) (SLV-E320EE and SLV-E470EE/E470EG)
- 21-pin
- Video input: pin20
- Audio input: pins 2 and 6
- Video input: pin 19
- Audio output: pins 1 and 3

LINE IN (SLV-E170EE/E170EG)
- VIDEO IN, phono jack (1)
- Input signal: 1 Vp-p, 75 ohms, unbalanced, sync negative
- AUDIO IN, phono jack (1)
- Input level: 327 mVrms
- Input impedance: more than 47 kilohms

LINE OUT (SLV-E170EE/E170EG)
- VIDEO OUT, phono jack (1)
- Output signal: 1 Vp-p, 75 ohms, unbalanced, sync negative
- AUDIO OUT, phono jack (1)
- Standard output: 327 mVrms
- Load impedance: 47 kilohms
- Output impedance: less than 10 kilohms

General

Power requirements
- 220 – 240 V AC, 50 Hz

Power consumption
- 19 W

Operating temperature
- 5°C to 40°C

Storage temperature
- -20°C to 60°C

Dimensions
- Approx. 355 x 102 x 280 mm (w/h/d) including projecting parts and controls

Mass
- Approx. 4.0 kg

Supplied accessories

Remote commander (1)
R6 (size AA) batteries (2)
Aerial cable (1)
21-pin adaptor (1)
(SLV-E320EE and SLV-E470EE only)

Design and specifications are subject to change without notice.

SAFETY-RELATED COMPONENT WARNING!!

COMPONENTS IDENTIFIED BY MARK ⚠ OR DOTTED LINE WITH MARK ⚠ ON THE SCHEMATIC DIAGRAMS AND IN THE PARTS LIST ARE CRITICAL TO SAFE OPERATION. REPLACE THESE COMPONENTS WITH SONY PARTS WHOSE PART NUMBERS APPEAR AS SHOWN IN THIS MANUAL OR IN SUPPLEMENTS PUBLISHED BY SONY.

VIDEO CASSETTE RECORDER

MICROFILM

SONY®

• **DIFFERENT SPECIFICATIONS LIST**

MODEL		SLV-E470EE	SLV-E470EG	SLV-E320EE	SLV-E170EE	SLV-E170EG
VIDEO HEAD/CHANNEL		4HEADS/4CH		2HEADS/2CH		
VIDEO SYSTEM	NTSC 3.58 (REC/PB)	X/X		X/X		
	NTSC 4.43 (REC/PB)	X/O		X/O		
	MESECAM (REC/PB)	O/O		O/O		
REC MODE	NTSC	X		X		
	PAL	SP/LP		SP		
PLAY MODE	NTSC	SP/LP/EP		SP		
	PAL	SP/LP		SP		
CLICK SHUTTLE		X		O	X	X
PLUG ADAPTOR		O	X	X	O	X
REMOTE COMMANDER		RMT-V198		RMT-V198B		

Note when replacing IC160 (MICOM)

When replacing IC160 (MICOM), be sure to replace IC160 with the newest part as shown below.

IC160 8-759-474-04 M37777M7A216GP

At the same time, check that the following resistors are used. Modify them when necessary.

R178	R448
XX	47 kΩ

Note when replacing IC462 (MICOM)

When replacing IC462, be sure to replace IC160 (MICOM) with the newest part as shown above.
At the same time, check that the resistors as shown above are used. Modify them when necessary.

* R178, R448 Location
See page 4-7 I-10 (PRINTED WIRING BOARD)
See page 4-15 G-18 (SCHEMATIC DIAGRAM)

SAFETY CHECK-OUT

After correcting the original service problem, perform the following safety checks before releasing the set to the customer.

1. Check the area of your repair for unsoldered or poorly-soldered connections. Check the entire board surface for solder splashes and bridges.
2. Check the interboard wiring to ensure that no wires are "pinched" or contact high-wattage resistors.
3. Look for unauthorized replacement parts, par-ticularly transistors, that were installed during a previous repair. Point them out to the customer and recommend their replacement.
4. Look for parts which, through functioning, show obvious signs of deterioration. Point them out to the customer and recommend their replace-ment.
5. Check the B+ voltage to see it is at the values specified.
6. Flexible Circuit Board Repairing
   • Keep the temperature of the soldering iron around 270°C during repairing.
   • Do not touch the soldering iron on the same conductor of the circuit board (within 3 times).
   • Be careful not to apply force on the conductor when soldering

6791

TABLE OF CONTENTS

SERVICE NOTE

1. HOW TO RETURN THE PINCH ROLLER, GUIDE ROLLER AND ELEVATOR CAM TO STOP MODE 4
2. HOW TO RETURN A TAPE INTO CASSETTE HALF 4
3. HOW TO REMOVE A CASSETTE FROM A MACHINE IF A CASSETTE IS LEFT IN A MACHINE IN TROUBLE 4
4. HOW TO REMOVE DRUM ASSEMBLY 4

1. GENERAL

Getting Started
- Unpacking 1-1
- Setting up the remote commander 1-1
- Connectiong the VCR 1-1
- Tuning your TV to the VCR 1-2
- Setting a language 1-2
- Setting the clock 1-2
- Tuning the VCR 1-3

Basic Operationa
- Playing a tape 1-4
- Recording TV programmes 1-5
- Recording TV programmes using the timer 1-6

Additional Operations
- Playing/searching at various speeds 1-6
- Recording TV programmes using the quick timer 1-7
- Checking/chaging/cancelling timer settings 1-7
- Adjusting the picture 1-8
- Editing with another VCR 1-8
- Index to parts and controls 1-8

2. DISASSEMBLY

2-1. CASE AND FRONT PANEL ASSEMBLY 2-1
2-2. POWER BLOCK 2-1
2-3. MA-293 BOARD WITH MECHANISM DECK ASSEMBLY 2-2
2-4. MECHANISM DECK ASSEMBLY 2-3
2-5. SLIDE KNOB 2-3
2-6. CIRCUIT BOARDS LOCATION 2-4

3. BLOCK DIAGRAMS

3-1. OVERALL BLOCK DIAGRAM 3-1
3-2. VIDEO BLOCK DIAGRAM 3-3
3-3. SERVO, SYSTEM CONTROL BLOCK DIAGRAM 3-5
3-4. TUNER, AUDIO BLOCK DIAGRAM 3-7
3-5. POWER BLOCK DIAGRAM 3-9

4. PRINTED WIRING BOARDS AND SCHEMATIC DIAGRAMS

4-1. FRAME SCHEMATIC DIAGRAM 4-1
4-2. PRINTED WIRING BOARDS AND SCHEMATIC DIAGRAMS 4-5
- MA-293 (MAIN) PRINTED WIRING BOARD 4-5
- MA-293 (TUNER) SCHEMATIC DIAGRAM 4-8
- MA-293 (VIDEO, AUDIO) SCHEMATIC DIAGRAM 4-9
- DS-76 (OPERATON SWITCHES) PRINTED WIRING BOARD 4-13
- MA-293 (SERVO, SYSTEM CONTROL), DS-76 (OPERATON SWITCHES) SCHEMATIC DIAGRAM 4-14
- MA-293 (POWER SUPPLY) SCHEMATIC DIAGRAM 4-17
- POWER BLOCK SR707 (SWITCHING REGULATOR) PRINTED WIRING BOARD AND SCHEMATIC DIAGRAM 4-19

5. REPAIR PARTS LIST

5-1. EXPLODED VIEWS 5-1
5-1-1. FRONT PANEL ASSEMBLY AND CASE 5-1
5-1-2. CHASSIS ASSEMBLY 5-2
5-1-3. MECHANISM DECK ASSEMBLY-1 5-3
5-1-4. MECHANISM DECK ASSEMBLY-2 5-4
5-1-5. MECHANISM DECK ASSEMBLY-3 5-5
5-1-6. MECHANISM DECK ASSEMBLY-4 5-6
5-2. ELECTRICAL PARTS LIST 5-7

6. INTERFACE, IC PIN FUNCTION DESCRIPTION

6-1. SYSTEM CONTROL — MECHANISM BLOCK INTERFACE (MA-293 Board IC160) 6-1
6-2. SYSTEM CONTROL — SERVO PERIPHERAL CIRCUIT INTERFACE (MA-293 Board IC160) 6-1
6-3. SYSTEM CONTROL — SYSTEM CONTROL PERIPHERAL CIRCUIT INTERFACE (MA-293 Board IC160) 6-2
6-4. SYSTEM CONTROL — VIDEO/RP BLOCK INTERFACE (MA-293 Board IC160) 6-2
6-5. SYSTEM CONTROL — AUDIO BLOCK INTERFACE (MA-293 Board IC160) 6-2
6-6. SERVO/SYSTEM CONTROL MICROPROCESSOR (MA-293 Board IC160) 6-3

7. ADJUSTMENTS

7-1 MECHANICAL ADJUSTMENTS 7-1
7-2. ELECTRICAL ADJUSTMENTS 7-1
2-1. PREPARATION BEFORE ADJUSTMENT 7-1
2-1-1. Equipment Required 7-1
2-1-2. Equipment Connection 7-1
2-1-3. Input Signal Check 7-1
2-1-4. Alignment Tape 7-1
2-1-5. Input/Output Levels and Impedance 7-2
2-1-6. Adjustment Sequence 7-2
2-2. POWER SUPPLY CHECK 7-2
2-2-1. Output Voltage Check (MA-293 Board) 7-2
2-3. SERVO SYSTEM CHECK 7-3
2-3-1. RF Switching Position Adjustment (MA-293 Board) 7-3
2-4. VIDEO SYSTEM CHECKS 7-3
2-4-1. X'tal OSC Check (MA-293 Board) 7-3
2-4-2. SYNC AGC Check (MA-293 Board) 7-4
2-4-3. White Clip/Dark Clip Check (MA-293 Board) 7-4
2-4-4. Recording Y Level Check (MA-293 Board) 7-4
2-4-5. Recording Chroma Level Check (MA-293 Board) 7-4
2-4-6. Playback Level Check (MA-293 Board) 7-5
2-5. AUDIO SYSTEM ADJUSTMENT 7-5
2-5-1. ACE Head Adjustment 7-5
2-5-2. E-E Output Level Check 7-5
2-5-3. Overall Output Level and Distortion Factor Check 7-5
2-5-4. Overall Noise Level Check 7-5
2-6. ADJUSTMENT PARTS LOCATION DIAGRAM 7-6

SERVICE NOTE

1. HOW TO RETURN THE PINCH ROLLER, GUIDE ROLLER AND ELEVATOR CAM TO STOP MODE

1) Remove the VHS MD assembly from the machine. (Refer to section 2-4. Removal.)
2) Rotate the worm gear-1 of the cam motor beneath the MD assembly in the direction arrow Ⓐ using a screw driver tip.

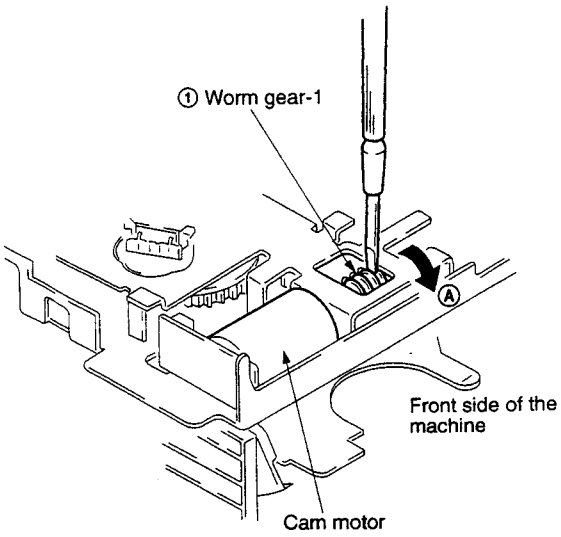

Fig. 1

2. HOW TO RETURN A TAPE INTO CASSETTE HALF

A tape can be rewound into a cassette half by rotating the flywheel-1 of the capstan motor in the direction of Ⓐ with hand.

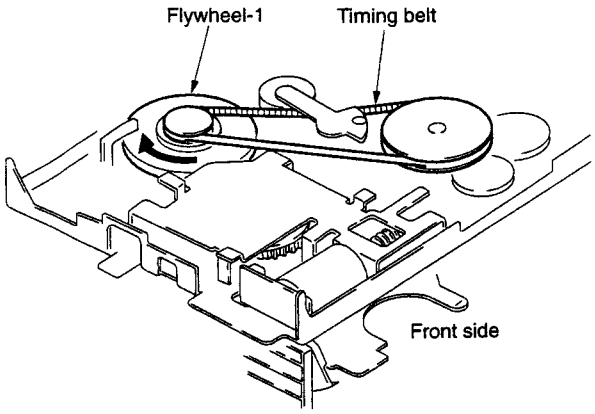

Fig. 2

3. HOW TO REMOVE A CASSETTE FROM A MACHINE IF A CASSETTE IS LEFT IN A MACHINE IN TROUBLE

Execute the section 2, and keep rotating the flywheel-1.

> When executing section 1 to 3, take care that a tape slack should not be caught by a mechanism or a tape should not be damaged.

4. HOW TO REMOVE DRUM ASSEMBLY

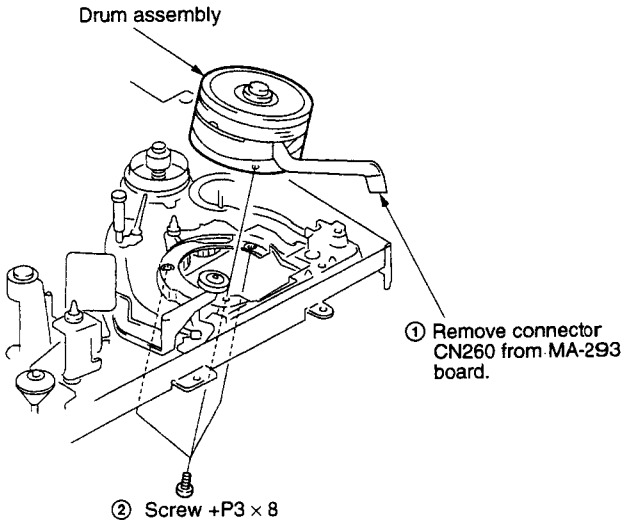

Fig. 3

SECTION 1
GENERAL

This section is extracted from instruction manual.

Step 1
Unpacking

Check that you have received the following items with the VCR:

- Remote commander

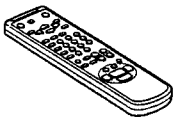

- Aerial cable

- R6 (size AA) batteries

- 21-pin adaptor (SLV-E320EE and SLV-E470EE only)

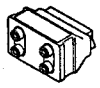

Checking your model name

The instructions in this manual are for the 5 models : SLV-E170EE, E170EG, E320EE, E470EE and E470EG. Check your model number by looking at the rear panel of your VCR. The SLV-E470EG is the model used for illustration purposes. Any difference in operation is clearly indicated in the text, for example, "SLV-E170EG only."

Step 2
Setting up the remote commander

Inserting the batteries

Insert two R6 (size AA) batteries by matching the + and – on the batteries to the diagram inside the battery compartment.

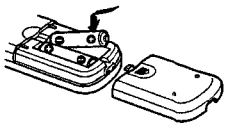

Using the remote commander

You can use this remote commander to operate this VCR and a Sony TV. Buttons on the remote commander marked with a dot (•) can be used to operate your Sony TV.

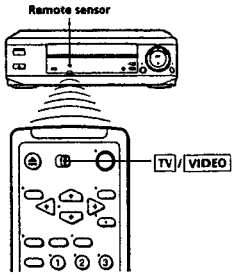

To operate	Set TV/VIDEO to
the VCR	VIDEO and point at the remote sensor on the VCR
a Sony TV	TV and point at the remote sensor on the TV

Notes

- With normal use, the batteries should last about three to six months.
- If you do not use the remote commander for an extended period of time, remove the batteries to avoid possible damage from battery leakage.
- Do not use a new battery with an old one.
- Do not use different types of batteries.
- (SLV-E170EE/E170EG only)
  The TV/VIDEO button only works when the TV/VIDEO switch is set to TV.

Step 3
Connecting the VCR

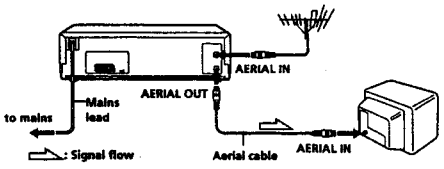

1 Disconnect the aerial cable from your TV and connect it to AERIAL IN on the rear panel of the VCR.

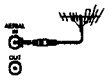

2 Connect AERIAL OUT of the VCR and the aerial input of your TV using the supplied aerial cable.

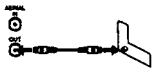

3 Connect the mains lead to the mains.

Additional connection

To a TV that has a LINE (Scart) connector (for SLV-E320EE and SLV-E470EE/E470EG)

This additional connection improves picture and sound quality. Connect the TV as shown on the right. Then press TV/VIDEO to display the VTR indicator in the VCR's display window.

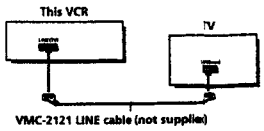

To a TV using a 21-pin adaptor (supplied) (for SLV-E320EE and SLV-E470EE)

If your TV doesn't have a LINE (Scart) connector, connect your TV using the 21-pin adaptor as shown on the right.

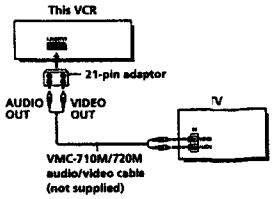

To a TV that has phono type audio/video input jacks (for SLV-E170EE/E170EG)

This additional connection improves picture and sound quality. Connect the TV as shown on the right using a commercially available connecting cable like the Sony VMC-710M/720M. If your TV has left and right audio input jacks, use a connecting cable like the Sony VMC-910MS.

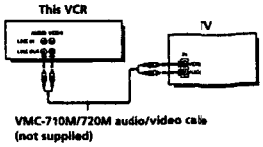

Step 4

Tuning your TV to the VCR

If you have connected your VCR to the TV using the audio/video cable, skip this step.

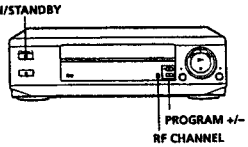

1 ON/STANDBY — Press ON/STANDBY to turn on the VCR.

2 RF CHANNEL — Press RF CHANNEL on the VCR.
The factory-preset RF channel appears in the display window.
The VCR signal is output through this channel to the TV.

RF 32

3 Turn on your TV and select a programme position for the VCR picture.
This channel will now be referred to as the video channel.

4 RF CHANNEL — Press RF CHANNEL.
The TV system indicator appears in the display window.
PROGRAM +/– — Press PROGRAM +/– (repeatedly) to select the correct TV system. If you watch the system B/G, select "G." If you watch the system D/K, select "K."

RF G 32

5 Tune the TV to the same channel as that shown in the display window so that the picture on the right appears on the TV screen.
Refer to your TV manual for tuning instructions.
If the picture does not appear clearly, see "To obtain a clear picture from the VCR" below.

SONY VIDEO CASSETTE RECORDER

6 RF CHANNEL — Press RF CHANNEL.
You have now tuned your TV to the VCR. From now on, whenever you want to play a tape, set the TV to the video channel.

To check to see if the TV tuning is correct
Set the TV to the video channel and press PROGRAM +/– on the VCR. If the TV screen changes to a different programme each time you press PROGRAM +/–, the TV tuning is correct.

To obtain a clear picture from the VCR
If the picture does not appear clearly in step 5 above, go to step 6 to finish this procedure once. Then start from step 2. After pressing RF CHANNEL in step 2 to display the RF channel, press PROGRAM +/– so that another RF channel appears. Then tune the TV to the new RF channel until a clear picture appears.

Note
- If you set the wrong TV system, you may have no sound or sound may be distorted.

Step 5

Selecting a language

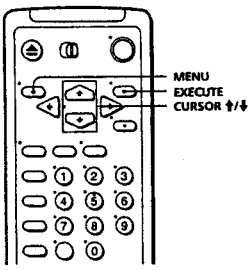

If you prefer other on-screen display language to English, you can change it using the on-screen display.

Before you start...
- Turn on the VCR and the TV.
- Set the TV to the video channel.

1 MENU — Press MENU.

MENU
▶TIMER SET / CHECK
SET UP MENU
TUNER PRESET
CLOCK SET
LANGUAGE

2 CURSOR, EXECUTE — Press CURSOR ↑/↓ to move the cursor (▶) to LANGUAGE, then press EXECUTE.

LANGUAGE
▶ENGLISH
РУССКИЙ
POLSKI

3 CURSOR, EXECUTE — Press CURSOR ↑/↓ to select the desired language, then press EXECUTE.

POLSKI
ENGLISH
▶РУССКИЙ
POLSKI

Step 6

Setting the clock

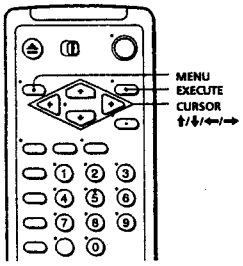

You must set the time and date on the VCR to be able to use the timer recording features properly. You can set the VCR clock using the on-screen display.

Before you start...
- Turn on the VCR and the TV.
- Set the TV to the video channel.

1 MENU — Press MENU.

MENU
▶TIMER SET / CHECK
SET UP MENU
TUNER PRESET
CLOCK SET
LANGUAGE

2 CURSOR, EXECUTE — Press CURSOR ↑/↓ to move the cursor (▶) to CLOCK SET, then press EXECUTE.

CLOCK SET
1.1997 WE 0:00

3 CURSOR — Press CURSOR ↑/↓ to set the day.
The day of the week is set automatically.

CLOCK SET
1.1997 TH 0:00

continued

Step 6 : Setting the clock (continued)

4 Press CURSOR ➡ to flash the month and set the month using CURSOR ⬆/⬇.

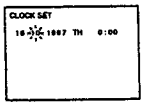

5 Set the year, hour and minutes in sequence, using CURSOR ➡ to flash the item to be set, and CURSOR ⬆/⬇ to select the digits.

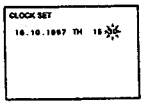

6 • EXECUTE Press EXECUTE to start the clock.

Tip
- To change the digits during setting, press CURSOR ⬅ to return to the item to be changed, and select the digits using CURSOR ⬆/⬇.

Note
- The menu disappears automatically if you don't proceed for more than a few minutes.

Step 7

Tuning the VCR

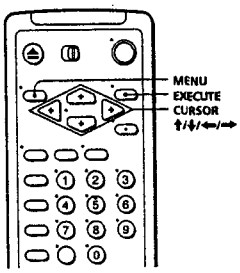

This VCR is capable of receiving B/G and D/K system channels. For receivable channel details, see page 14. First, we recommend that you preset the receivable channels in your area using automatic presetting. Then, if some channels could not be preset automatically, you can preset them manually; if there are any unwanted channels among the preset ones, you can disable the channels.

Before you start...
- Turn on the VCR and the TV.
- Set the TV to the video channel.

Presetting all receivable channels automatically

1 • MENU Press MENU.

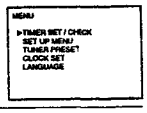

2 Press CURSOR ⬆/⬇ to move the cursor (▶) to TUNER PRESET, then press EXECUTE.

• EXECUTE

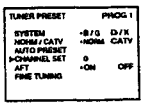

3 Press CURSOR ⬆/⬇/⬅/➡ to move the cursor (▶) to SYSTEM, then select either B/G or D/K, whichever is applicable in your area.

If SYSTEM is set to the wrong position, the sound will be distorted or noisy.

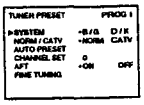

continued

Step 7 : Tuning the VCR (continued)

4 Press CURSOR ⬆/⬇ to move the cursor (▶) to AUTO PRESET, then press EXECUTE.

• EXECUTE

All receivable channels are preset in numerical sequence. When no more receivable channels can be found, presetting stops and the picture from the lowest numbered channel is displayed on the TV screen.

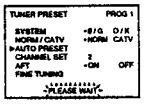

Receivable channel chart

D/K TV system		B/G TV system	
CHANNEL SET number	Corresponding TV channel	CHANNEL SET number	Corresponding TV channel
2	R1	2	E2
5	R6	3	E3
6	R7	4	E4
12	R12	5	E5
13	R2	6	E6
14	R3	7	E7
15	R4	8	E8
16	R5	9	E9
17	R8	10	E10
18	R9	11	E11
19	R10	12	E12
20	R11	21-69	E21-E69
21-69	R21-R69	CATV 1-41	S1-S41
		CATV 42-46	S01-S05

Presetting channels manually

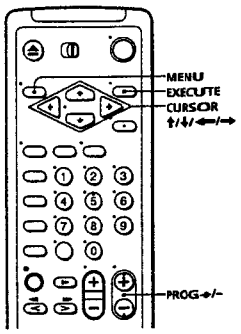

1 • MENU Press MENU.

2 Press CURSOR ⬆/⬇ to move the cursor (▶) to TUNER PRESET, then press EXECUTE.

• EXECUTE

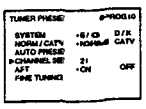

3 Press CURSOR ⬆/⬇/⬅/➡ to move the cursor (▶) to NORM/CATV, then select NORM.

To preset CATV channels, select CATV.

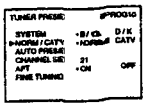

continued

Step 7 : Tuning the VCR (continued)

4 Press CURSOR ↑/↓ to move the cursor (▶) to CHANNEL SET.

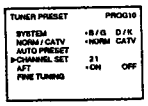

5 Press PROG +/– to select the programme position.

Selected programme position

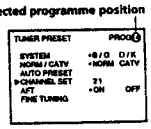

6 Press CURSOR ➡ repeatedly until the channel you want is displayed.

Pressing CURSOR ⬅ goes back to the previous channels.

The channels are scanned in the receivable channel chart order (see page 14).

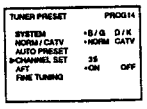

If you know the number of the channel you want, press the programme number buttons. For example, for channel 5, first press "0" and then press "5."

7 If the TV sound is distorted or noisy, press CURSOR ↑/↓/⬅/➡ to move the cursor (▶) to SYSTEM, then select either B/G or D/K, whichever is applicable in your area.

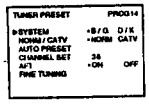

8 To allocate another channel to another programme position, repeat steps 5 to 7.

9 Press EXECUTE.

Disabling unwanted programme positions

After tuning the TV channels, you can disable unused programme positions. The disabled positions will be skipped later when you press PROG +/–.

1. Press MENU, then select TUNER PRESET and press EXECUTE.
2. Select CHANNEL SET.
3. Press PROG +/– until the programme position you want to disable appears beside "PROG" on the TV screen.
4. Press programme number button "0" twice to display the number "0" beside CHANNEL SET.
5. Repeat steps 3 and 4 for other positions you want to disable.
6. Press EXECUTE.

If the picture is not clear

Normally, the Auto Fine Tuning (AFT) function automatically tunes in channels clearly. If, however, the picture is not clear, you may also use the manual tuning function.

1. Press PROG +/– to select the programme position for which you cannot obtain a clear picture.
2. Press MENU, then select TUNER PRESET and press EXECUTE.
3. Select FINE TUNING. The fine tuning meter appears.

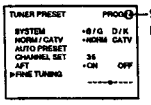

Selected programme position

4. Press CURSOR ⬅/➡ to get a clearer picture, then press EXECUTE.

   Note that the AFT (Auto Fine Tuning) setting switches to OFF.

Note

- The menu disappears automatically if you don't proceed for more than a few minutes.

Playing a tape

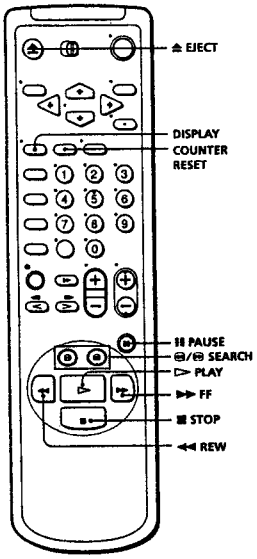

1 Turn on your TV and set it to the video channel.

2 Insert a tape.

The VCR turns on and starts playing automatically if you insert a tape with its safety tab removed.

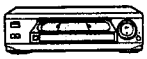

3 Press ▷ PLAY.

When the tape reaches the end, it will rewind automatically.

Additional tasks

To	Press
Stop play	■ STOP
Pause play	❚❚ PAUSE
Resume play after pause	❚❚ PAUSE or ▷ PLAY
Search forward	▶▶ FF or ⊕ SEARCH during playback
Search backward	◀◀ REW or ⊖ SEARCH during playback
Fast-forward the tape	▶▶ FF during stop
Rewind the tape	◀◀ REW during stop
Eject the tape	⏏ EJECT

To set the colour system

If streaks appear during playback, set COLOR SYSTEM on the VCR to conform to the system that the tape was recorded in. (The normal setting is AUTO.)

If your tape was recorded in	Set COLOR SYSTEM to
PAL	PAL/MESECAM
NTSC	NTSC
MESECAM	PAL/MESECAM

To play an NTSC-recorded tape

Set NTSC PB at the rear of the VCR according to the colour system of your TV.

When your TV is	Set NTSC PB to
PAL only	ON PAL TV
PAL and NTSC	NTSC 4.43

continued

Playing a tape (continued)

To use the time counter

At the point on the tape that you want to find later, press COUNTER RESET. The counter in the display window resets to "0H00M00S." Search for the point afterwards by referring to the counter.

To display the counter on the TV screen, press DISPLAY.

Notes

- The counter resets to "0H00M00S" whenever a tape is reinserted.
- The counter stops counting when it comes to a portion with no recording.
- If a tape has portions recorded in both PAL and NTSC systems, the time counter reading will not be correct. This is due to the difference between the counting cycles of the two video systems.
- Depending on your TV, the following may occur while playing an NTSC-recorded tape:
  - the picture becomes black and white
  - the picture shakes
  - no picture appears on the TV screen
  - black streaks appear horizontally on the TV screen
  - the colour density increases or decreases.

Recording TV programmes

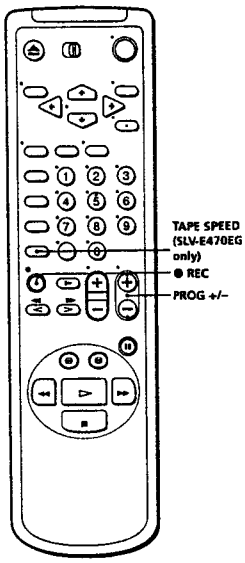

1 Turn on your TV and set it to the video channel.

2 Insert a tape with its safety tab in place.

continued

Recording TV programmes (continued)

3 PROG

Press PROG +/– to select the programme position you want to record.

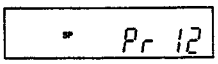

4 TAPE SPEED

(SLV-E470EG only)

Press TAPE SPEED to select the tape speed, SP or LP.

LP provides recording time twice as long as SP, however, SP produces better picture and audio quality.

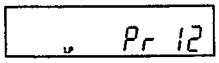

5 ●REC

Press ● REC to start recording.

To stop recording

Press ■ STOP.

To check the remaining tape length

Press DISPLAY during playback or recording. The white bar indicates the approximate length of tape remaining.

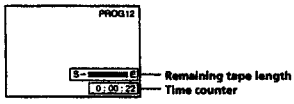

To watch another TV programme while recording

1 (SLV-E320EE and SLV-E470EE/E470EG only)
Press TV/VIDEO to turn off the VTR indicator in the display window.
(SLV-E170EE/E170EG only)
If the TV is connected to the VCR using an audio/video cable, set the TV to TV input. If the TV is connected to the VCR using only the aerial cable, skip this step.

2 Select another programme position on the TV.

To save a recording

To prevent accidental erasure, break off the safety tab as illustrated. To record on a tape again, cover the tab hole with adhesive tape.

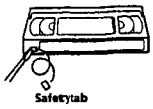

Tips

- To select a programme position, you can use the programme number buttons on the remote commander. For two-digit numbers, press the –/-- (ten's digit) button followed by the programme number buttons.
- You can select a video source from the LINE (TV) connector (for SLV-E320EE and SLV-E470EE/E470EG) or the LINE IN jacks (for SLV-E170EE/E170EG) using INPUT SELECT or PROG +/–. When you use PROG +/–, "L" appears in the display window between the lowest programme position and the highest one.
- The display appears on the TV screen indicating information about the tape, but the information won't be recorded on the tape.
- If you don't want to watch TV while recording, you can turn off the TV.

Notes

- The display does not appear during still (pause) mode, search mode, or slow-motion playback.
- The display will not appear while playing an NTSC-recorded tape.
- It may take up to one minute for the VCR to calculate and display the remaining tape length after you press DISPLAY.

Recording TV programmes using the timer

You can preset up to eight programmes at a time.

Before you start...

- Check that the VCR clock is set to the correct time.
- Insert a tape with its safety tab in place. Make sure the tape is longer than the total recording time.
- Turn on your TV and set it to the video channel.

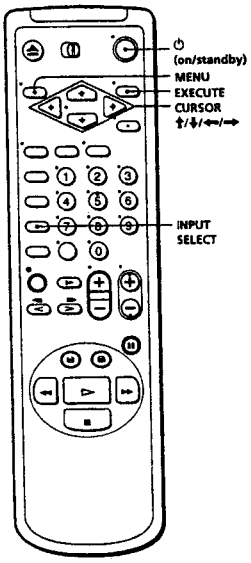

1 • MENU

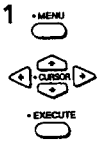

Press MENU and select TIMER SET/CHECK, then press EXECUTE.

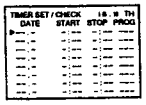

2

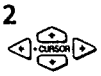

Set the date, start and stop times, programme position, and tape speed:

1 Press CURSOR → to flash each item in turn.

2 Press CURSOR ↑/↓ to set each item.

To correct a setting, press CURSOR ← to return to that setting and reset.

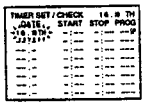

To record the same programme every day or the same day every week, press CURSOR ↓ while the date is flashing. For details, see "Daily/weekly recording" on page 26.

To record from a source connected to the LINE (TV) connector (for SLV-E320EE and SLV-E470EE/E470EG) or LINE IN jacks (for SLV-E170EE/E170EG), press INPUT SELECT to display "L" in the "PROG" position.

3

Press CURSOR → to confirm the setting.

The cursor (▶) appears at the beginning of the line. To enter another setting, move the cursor to the next line and repeat step 2.

4 • EXECUTE

Press EXECUTE.

5

Press ⏻ to turn off the VCR.

The TIMER indicator appears in the display window and the VCR stands by for recording.

To record from a source, leave the connected equipment switched on.

To stop recording

To stop the VCR while recording, press ■ STOP.

To use the VCR after setting the timer

To use the VCR before a timer recording begins, just press ⏻. The TIMER indicator turns off and the VCR switches on. Remember to press ⏻ to reset the VCR after using the VCR.

You can also do the following tasks while the VCR is recording:

- Reset the counter.
- Display tape information on the TV screen.
- Check the timer settings.
- Watch another TV programme.

continued

Recording TV programmes using the timer (continued)

Daily/weekly recording

In step 2 above, press CURSOR ↓ to select the recording pattern. Each time you press CURSOR ↓, the indication changes as shown below.

the current date → SU-SA → MO-SA → MO-FR → EVERY SA .....
→ EVERY MO → EVERY SU → 1 month later →(dates count down)
→ the current date

Tips

- To set the programme position, you can also use the PROG +/– or programme number buttons.
- (SLV-E470EE/E470EG only)
  To set the tape speed, you can also use TAPE SPEED.

Playing/searching at various speeds

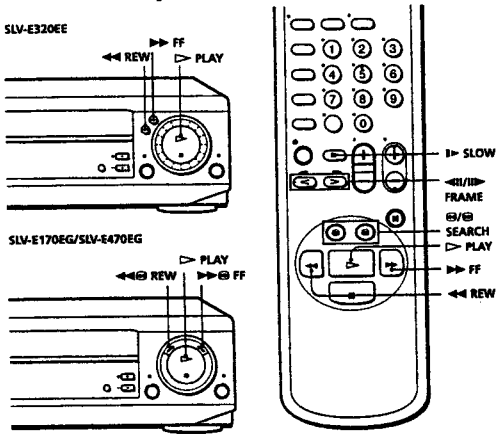

Playback options	Operation
Fast-forward/rewind	During stop, press ▶▶ FF or ◀◀ REW.
View the picture during fast-forward or rewind	During fast-forward, hold ▶▶ FF down. During rewind, hold ◀◀ REW down.
Play at high speed	During playback or pause, press ⊖ SEARCH or ⊕ SEARCH. To change direction, press II▶ FRAME or ◀II FRAME.
Play in slow motion	During playback or pause, press I▶ SLOW. To change direction, press II▶ FRAME or ◀II FRAME.
Play frame by frame	During pause, press II▶ FRAME or ◀II FRAME. Hold the button down to play one frame each second.
Play in reverse	During playback, press ◀II FRAME.

To resume normal playback

Press ▷ PLAY.

continued

Using the CLICK SHUTTLE ring (SLV-E320EE only)

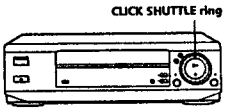

With the CLICK SHUTTLE ring, you can operate a variety of playback options.

During playback or pause, turn the CLICK SHUTTLE ring clockwise or anticlockwise. Each change in the CLICK SHUTTLE ring position changes the playback mode.

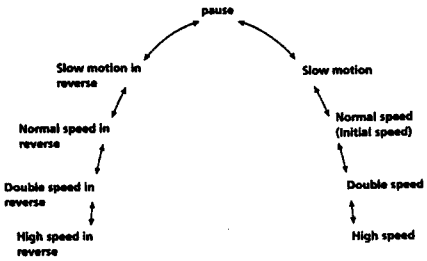

Tip

- Adjust the picture using TRACKING +/– on the VCR if:
  - streaks appear while playing in slow motion
  - the picture shakes while pausing.

Notes

- The playback sound is muted during these operations.
- (SLV-E470EE/E470EG only)
  In LP mode, noise may appear or there may be no colour.
- (SLV-E170EE/E170EG and SLV-E320EE only)
  Streaks or snow cannot be eliminated completely in the various playback operations.

Recording TV programmes using the quick timer

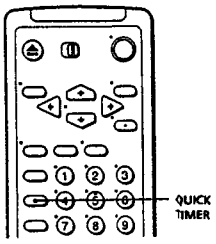

After starting recording in the normal way, you can have the VCR stop recording automatically after a specified duration.

1 While recording, press QUICK TIMER once.

2 Press QUICK TIMER repeatedly to set the duration.
Each press advances the time in increments of 30 minutes.

For SLV-E470EG

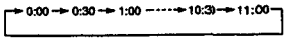

For SLV-E170EG and SLV-E320EE

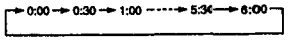

The duration decreases minute by minute to 0:00, then the VCR stops recording and turns off automatically.

To extend the duration

Press QUICK TIMER repeatedly to set to the new duration.

To stop recording

To stop the VCR while recording, press ■ STOP.

continued

Using the quick timer during stop mode

1 Press QUICK TIMER.
2 Press PROG +/– or INPUT SELECT to select the programme position you want to record.
3 Press QUICK TIMER repeatedly to set the recording duration.
The recording starts.

Checking/ changing/ cancelling timer settings

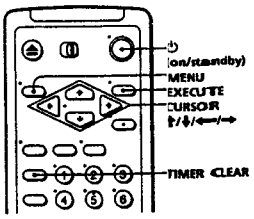

Before you start...

- Turn on your TV and set it to the video channel.

1 Press ⏻ to turn on the VCR.
2 Press MENU and select TIMER SET/CHECK:
- If you want to change a setting, go on to the next step.
- If you do not need to change the settings, press EXECUTE, then turn off the VCR to return to recording standby.

3 Press CURSOR ↑/↓ to select the setting you want to change or cancel:
- To change the setting, press CURSOR ←/→ to flash the item you want to change, and press CURSOR ↑/↓ to reset it. Then, press CURSOR → repeatedly until the cursor (▶) appears at the beginning of the line.
- To cancel the setting, press TIMER CLEAR.

4 Press EXECUTE.
If any settings remain, turn off the VCR to return to recording standby.

When the timer settings overlap

The programme that starts first has priority and the second programme starts recording only after the first programme has finished. If the programmes start at the same time, the programme listed first in the menu has priority.

Adjusting the picture

Adjusting the tracking

Although the VCR automatically adjusts the tracking when playing a tape (the tracking indicator ▮ flashes in the display window, then goes off), distortion may occur if the tape was recorded in poor condition. If so, manually adjust the tracking.

Press the TRACKING +/– buttons on the VCR to display the tracking meter. The distortion should disappear as you press one of the two buttons. (The ▮ indicator light up.) To resume automatic tracking adjustment eject the tape and restart it.

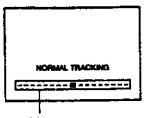

Tracking meter

About Optimum Picture Control (OPC)

Optimum Picture Control (OPC) automatically improves recording and playback quality by adjusting the VCR to the condition of the video heads and tape. To maintain better picture quality, we recommend that you set OPC to ON in the SET UP MENU (with the OPC indicator in the display window lit).

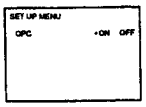

OPC playback

The OPC function automatically works on all types of tapes, including rental tapes and tapes that were not recorded with OPC.

OPC recording

Whenever you insert a tape and first start recording, the VCR adjusts to the tape using the OPC function (the OPC indicator flashes rapidly). This adjustment is retained until the tape is ejected.

To deactivate the OPC

Press MENU and select SET UP MENU, then set OPC to OFF. The OPC indicator in the display window goes off.

Note

- There is a delay of a few seconds before the VCR actually starts recording while the VCR analyses the tape. To avoid the delay, first set the VCR to recording pause (the OPC indicator flashes slowly) and press ● REC to have the VCR analyse the tape. After the OPC indicator stops flashing, press ❚❚ PAUSE to start recording immediately. If you press ❚❚ PAUSE before the OPC indicator stops flashing, the OPC function is cancelled.

Editing with another VCR

How to connect to record on this VCR

For SLV-E320EE and SLV-E470EE/E470EG

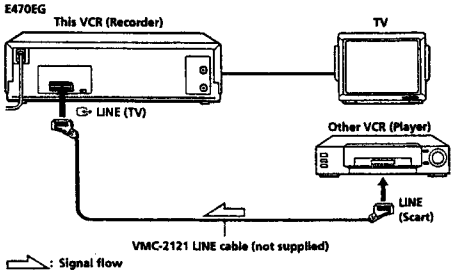

For SLV-E170EE/E170EG

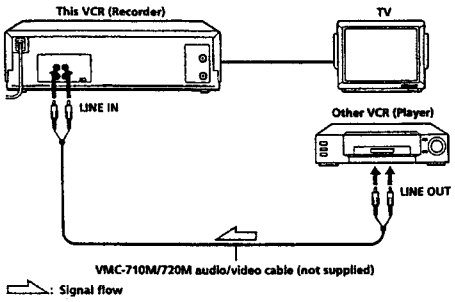

continued

Editing with another VCR (continued)

Notes

(SLV-E320EE and SLV-E470EE only)

- If the other VCR doesn't have a LINE (Scart) connector, attach the 21-pin adaptor (supplied) to the LINE (TV) connector on this VCR. Then, use the VMC-710M/720M audio/video cable (not supplied) to connect to the line out jacks of the other VCR.

(SLV-E170EE/E170EG only)

- Make sure you connect the plugs to jacks of the same colour.
- If you connect this VCR to both the LINE IN and LINE OUT jacks of the other VCR, select the input correctly to prevent a humming noise.

Operation (when recording on this VCR)

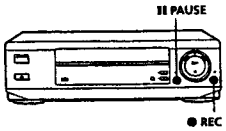

Before you start editing

- Turn on your TV and set it to the video channel.
- Press INPUT SELECT or PROG +/– to display "L" in the display window.
- Press TAPE SPEED to select the tape speed, SP or LP. (SLV-E470EE/E470EG only)

1. Insert a source tape with its safety tab removed into the other (playback) VCR. Search for the point to start playback and set it to playback pause.
2. Insert a tape with its safety tab in place into this (recording) VCR. Search for the point to start recording and press ❚❚ PAUSE.
3. Press ● REC on this VCR and set it to recording pause.
4. To start editing, press the ❚❚ PAUSE buttons on both VCRs at the same time.

To stop editing

Press the ■ STOP buttons on both VCRs.

Note

- If you start recording following the procedure above, the VCR won't start recording with the OPC function. To record a tape with the OPC function, press ● REC again during recording pause in step 3 so that the VCR analyses the tape. Then when you start recording in step 4, press ❚❚ PAUSE immediately after the OPC indicator stops flashing. If you press ❚❚ PAUSE before the OPC indicator stops flashing, the OPC function is cancelled.

Index to parts and controls

Refer to the pages indicated in parentheses ( ) for details.

Front panel (SLV-E170EE/E170EG and SLV-E470EE/E470EG)

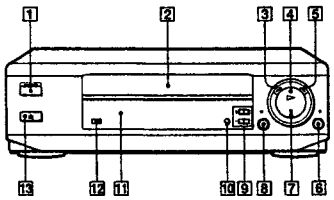

1. ON/STANDBY switch/indicator (8)
2. Tape compartment
3. ◀◀ REW button (27)
4. ▷ PLAY button (19, 27)
5. ▶▶ FF button (27)
6. ● REC button (34)
7. ■ STOP button (34)
8. ❚❚ PAUSE button (34)
9. PROGRAM/TRACKING +/– buttons (8, 28, 32)
10. RF CHANNEL button (8)
11. Remote sensor (5)
12. COLOR SYSTEM switch (19)
13. ⏏ EJECT button (19)

continued

Index to parts and controls (continued)

Front panel (SLV-E320EE)

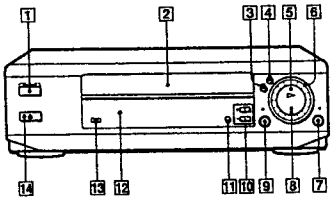

1 ON/STANDBY switch/indicator (8)
2 Tape compartment
3 ◀◀ REW button (27)
4 ▶▶ FF button (27)
5 ▷ PLAY button (19, 27)
6 CLICK SHUTTLE ring (28)
7 ● REC button (34)
8 ■ STOP button (34)
9 ❚❚ PAUSE button (34)
10 PROGRAM/TRACKING +/– buttons (8, 28, 32)
11 RF CHANNEL button (8)
12 Remote sensor (5)
13 COLOR SYSTEM switch (19)
14 ≜ EJECT button (19)

Display window

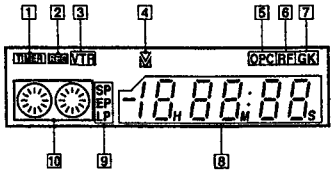

1 TIMER indicator (25)
2 REC (Recording) indicator
3 VTR indicator (23)
4 ▣ (Tracking) indicator (32)
5 OPC indicator (32)
6 RF indicator (8)
7 TV system indicator (8)
8 Line/programme position indicator/time counter/clock (8, 20, 22)
9 Tape speed indicators (22)
10 Tape indicator

continued

Index to parts and controls (continued)

Rear panel (SLV-E320EE and SLV-E470EE/E470EG)

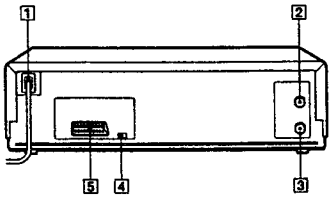

1 Mains lead (6)
2 AERIAL IN connector (6)
3 AERIAL OUT connector (6)
4 NTSC PB switch (19)
5 LINE (TV) connector (7, 33)

Rear panel (SLV-E170EE/E170EG)

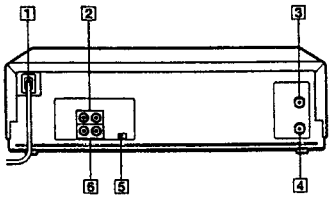

1 Mains lead (6)
2 LINE-1 IN AUDIO/VIDEO jacks (33)
3 AERIAL IN connector (6)
4 AERIAL OUT connector (6)
5 NTSC PB switch (19)
6 LINE OUT AUDIO/VIDEO jacks (7)

Remote commander

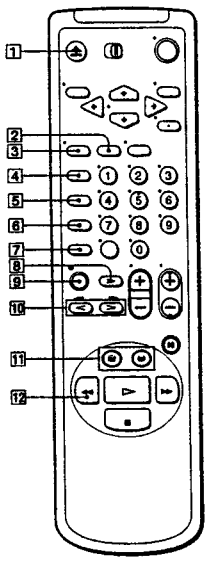

1 ≜ EJECT button (19)
2 COUNTER RESET button (20)
3 DISPLAY button (20, 22)
4 TIMER CLEAR button (31)
5 QUICK TIMER button (28)
6 INPUT SELECT button (3, 25, 34)
7 TAPE SPEED button (SLV-E470EE/E470EG only) (22)
8 ❚▶ SLOW button (27)
9 ● REC button (22)
10 ◀❚❚/❚❚▶ FRAME button (27)
11 ⊖/⊕ SEARCH buttons (19, 27)
12 ◀◀ REW button (19, 27)

continued

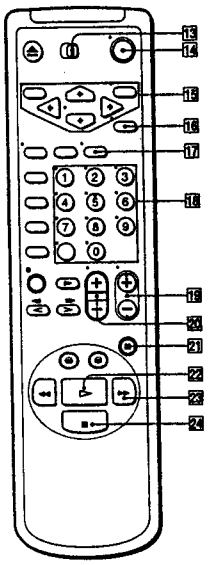

13 TV/VIDEO remote control switch (5)

14 ⏻ (on/standby) switch (25, 31)

15 Menu operation buttons (11)

MENU button
CURSOR ↑/↓/←/→ buttons
EXECUTE button

16 AUDIO MONITOR button (This button doesn't work for this VCR)

17 TV/VIDEO button (*SLV-E170EE/E170EG only: This button only works when the* TV/VIDEO *switch is set to* TV.) (5)

18 Programme number/–/-- (ten's digit) buttons (23)

19 PROG +/– buttons (16, 22)

20 VOL +/– buttons (*for TV*)

21 ❚❚ PAUSE button (19)

22 ▷ PLAY button (19, 27)

23 ▶▶ FF button (19, 27)

24 ■ STOP button (19)

SECTION 2
DISASSEMBLY

NOTE : Follow the disassembly procedure in the numerical order given.

2-1. CASE AND FRONT PANEL ASSEMBLY

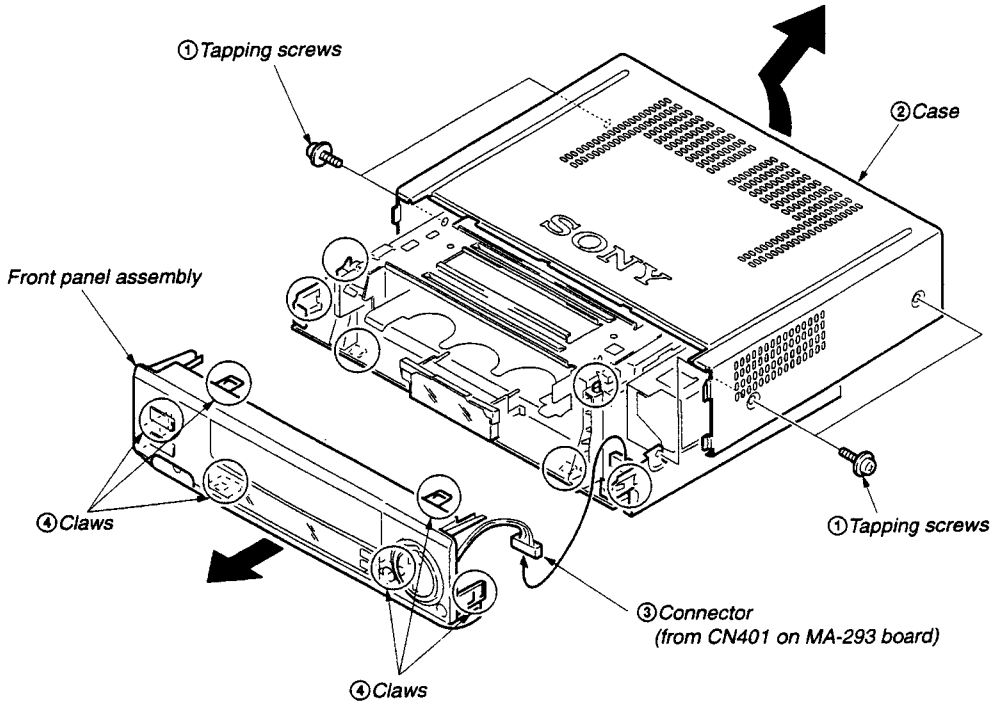

2-2. POWER BLOCK

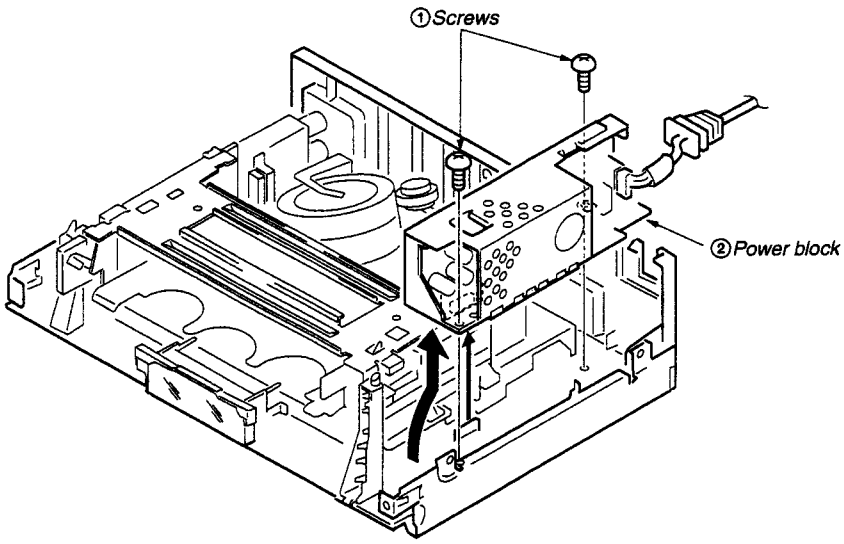

2-3. MA-293 BOARD WITH MECHANISM DECK ASSEMBLY

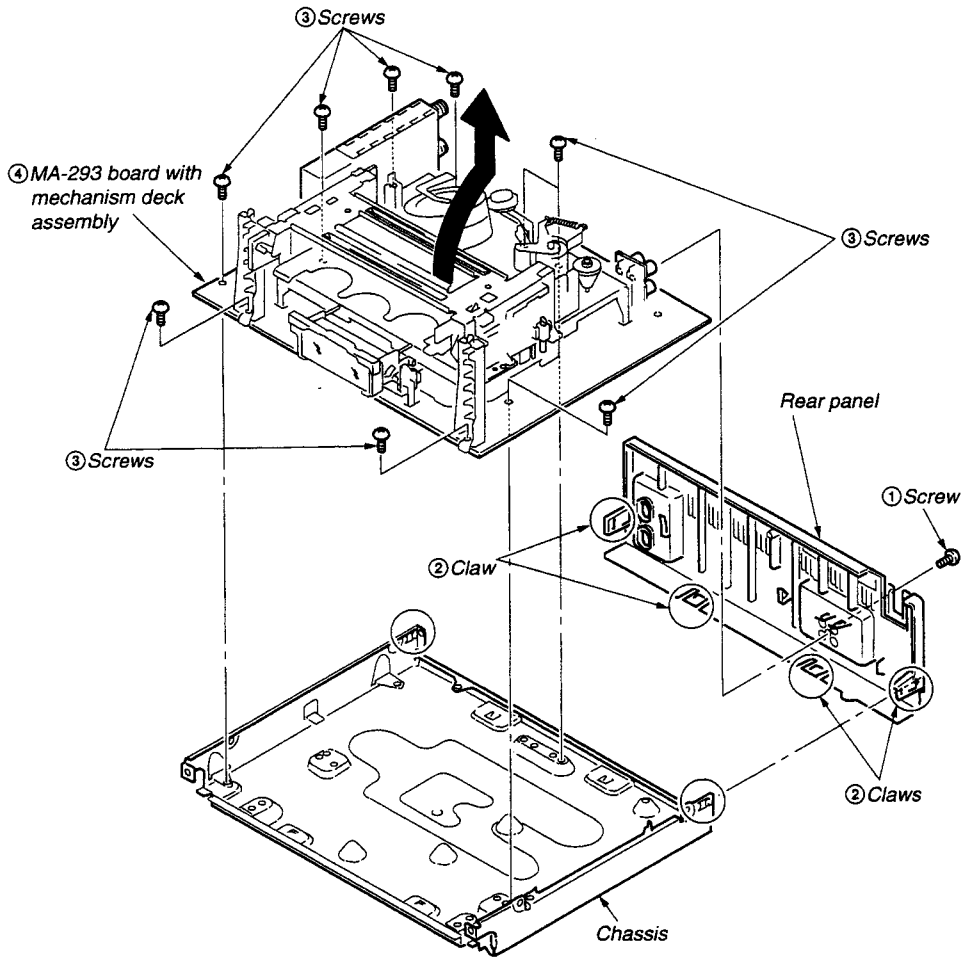

2-4. MECHANISM DECK ASSEMBLY

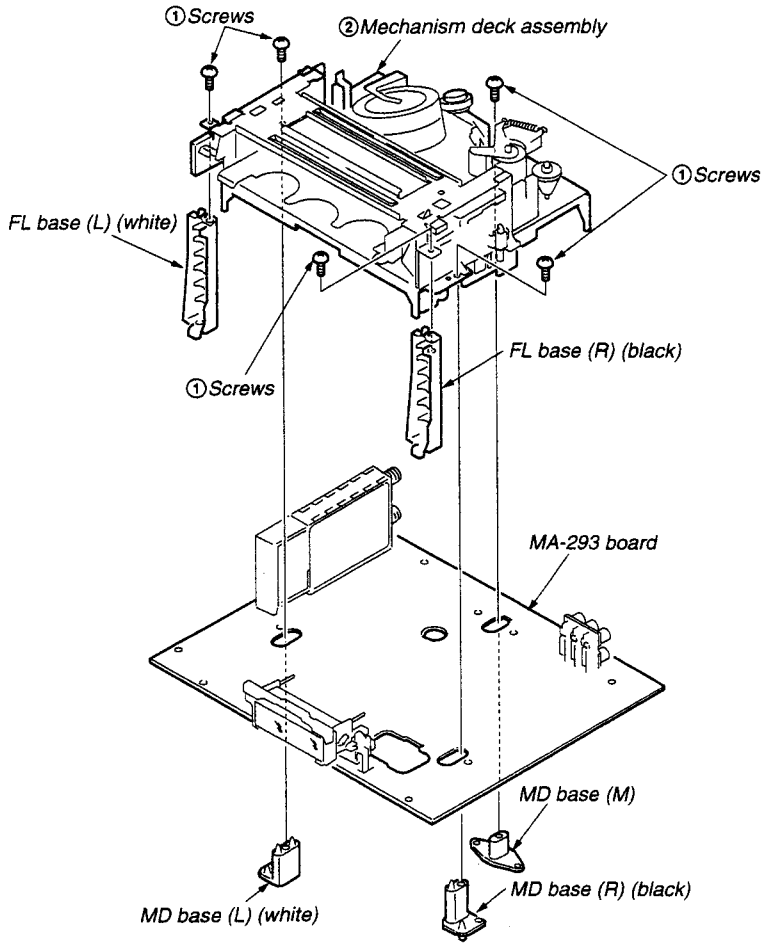

2-5. SLIDE KNOB

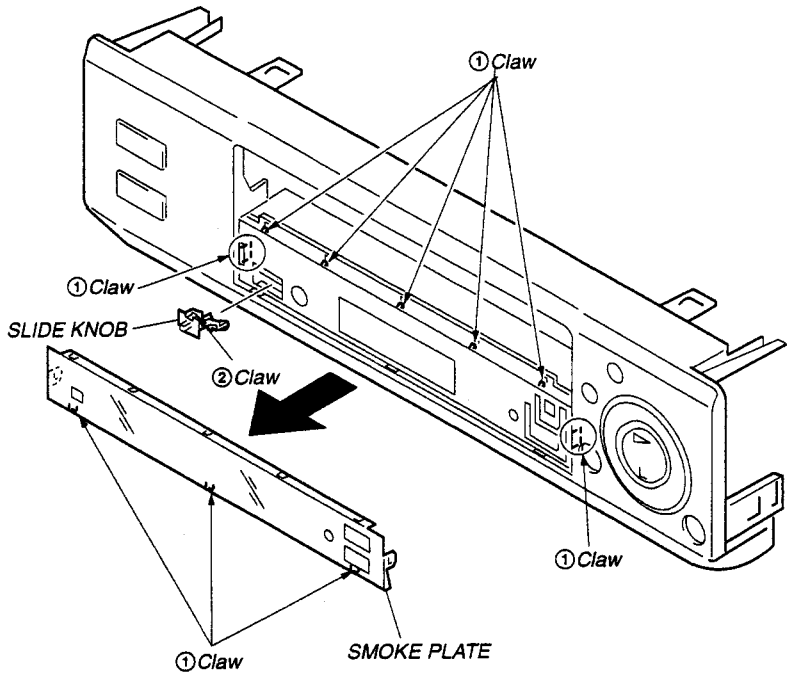

2-5. CIRCUIT BOARDS LOCATION

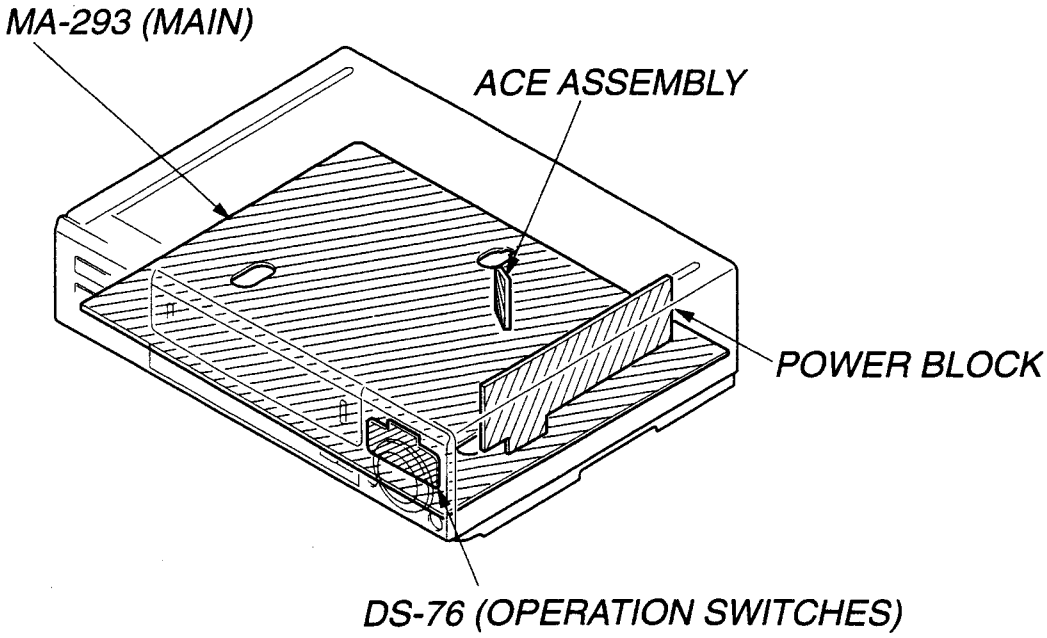

SECTION 3
BLOCK DIAGRAMS

3-1. OVERALL BLOCK DIAGRAM

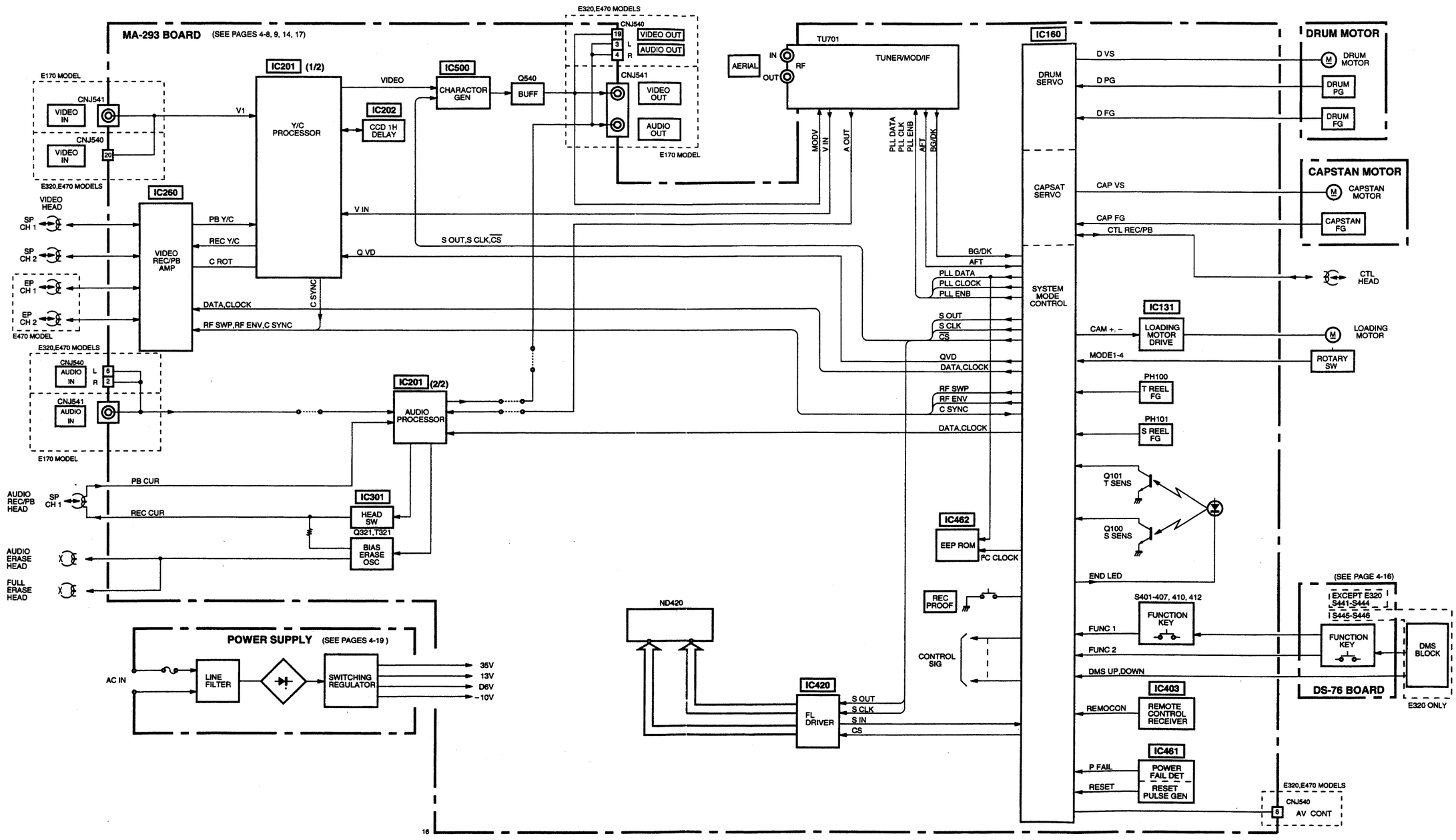

3-2. VIDEO BLOCK DIAGRAM

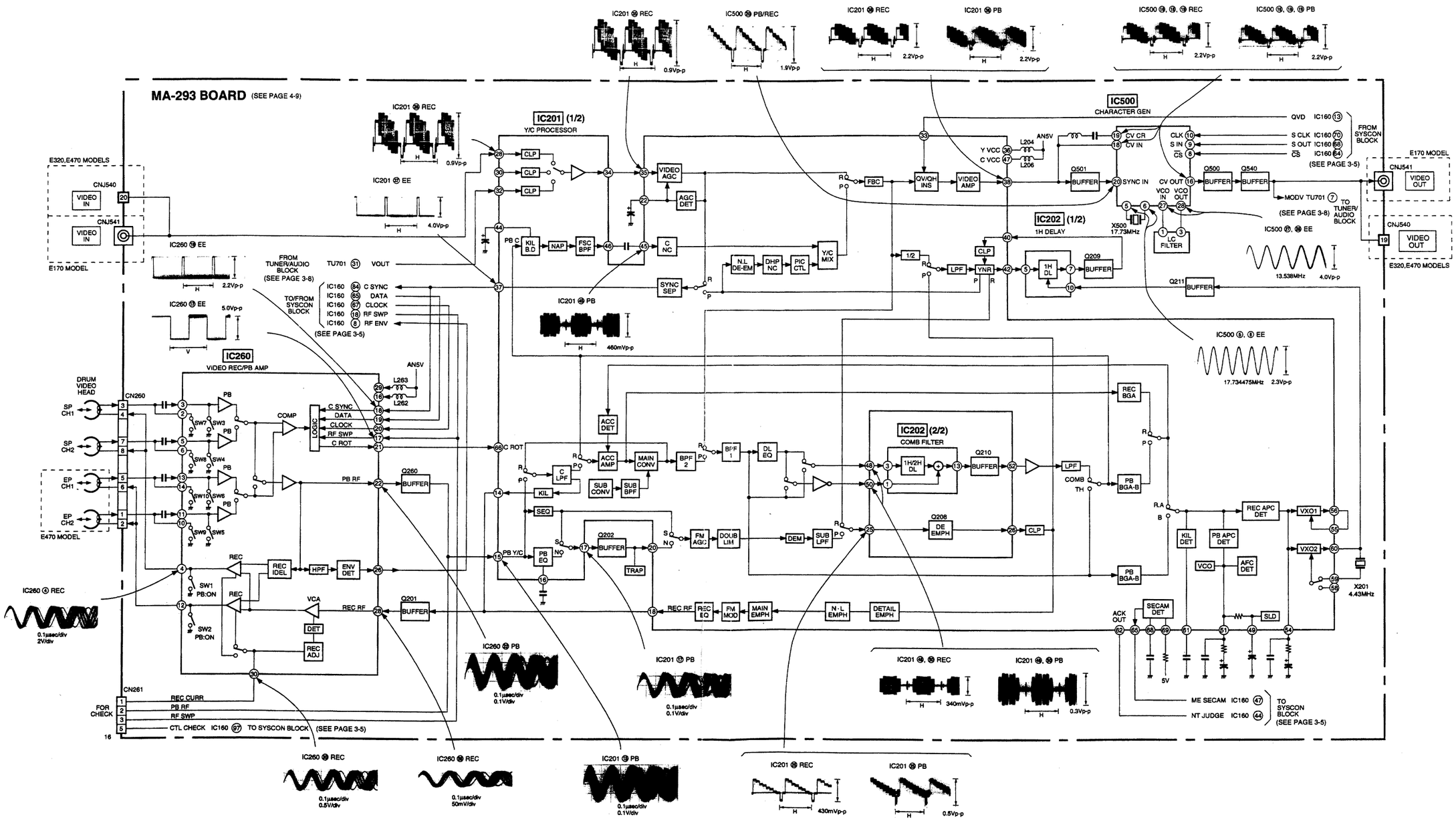

3-3. SERVO, SYSTEM CONTROL BLOCK DIAGRAM

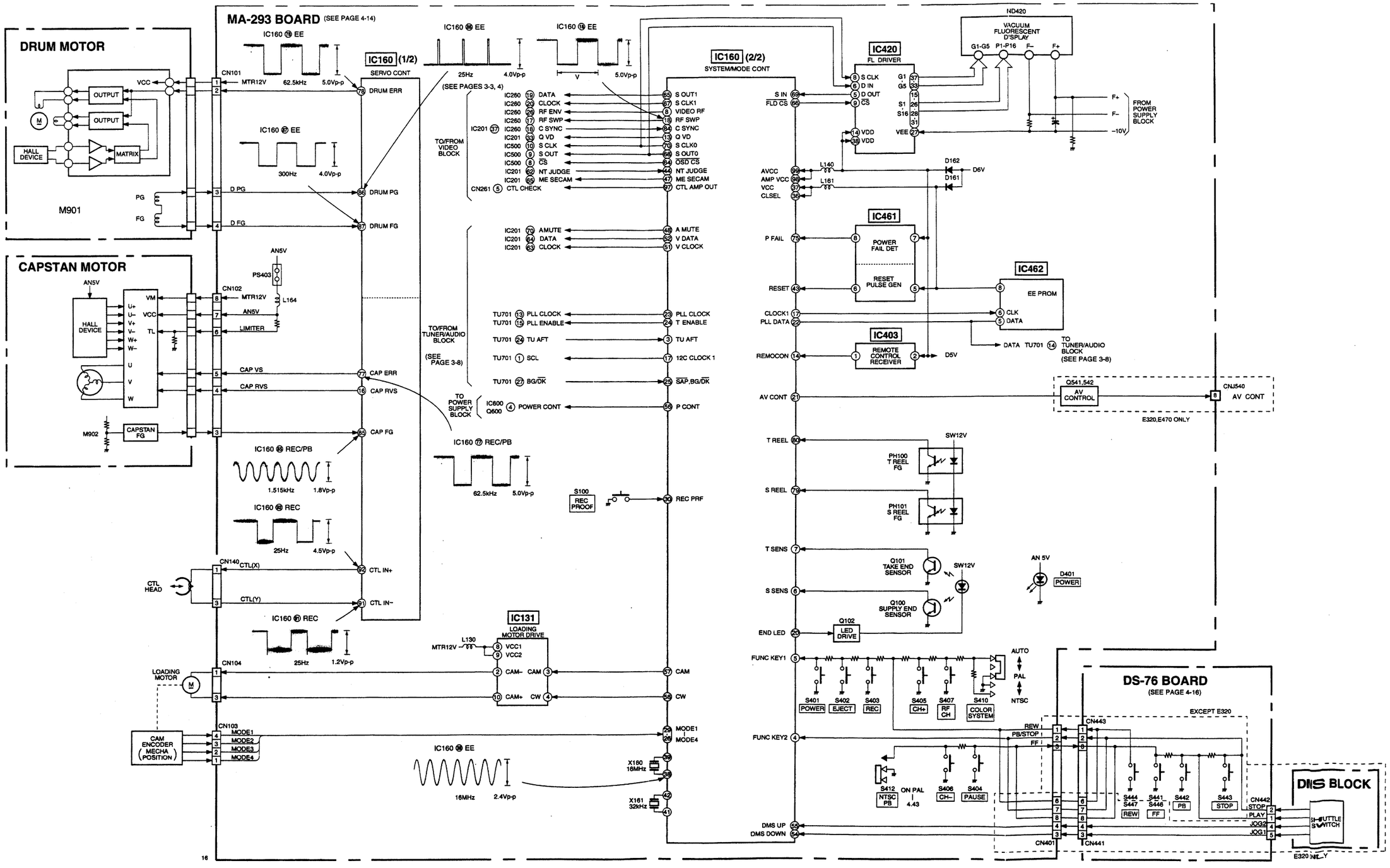

3-4. TUNER, AUDIO BLOCK DIAGRAM

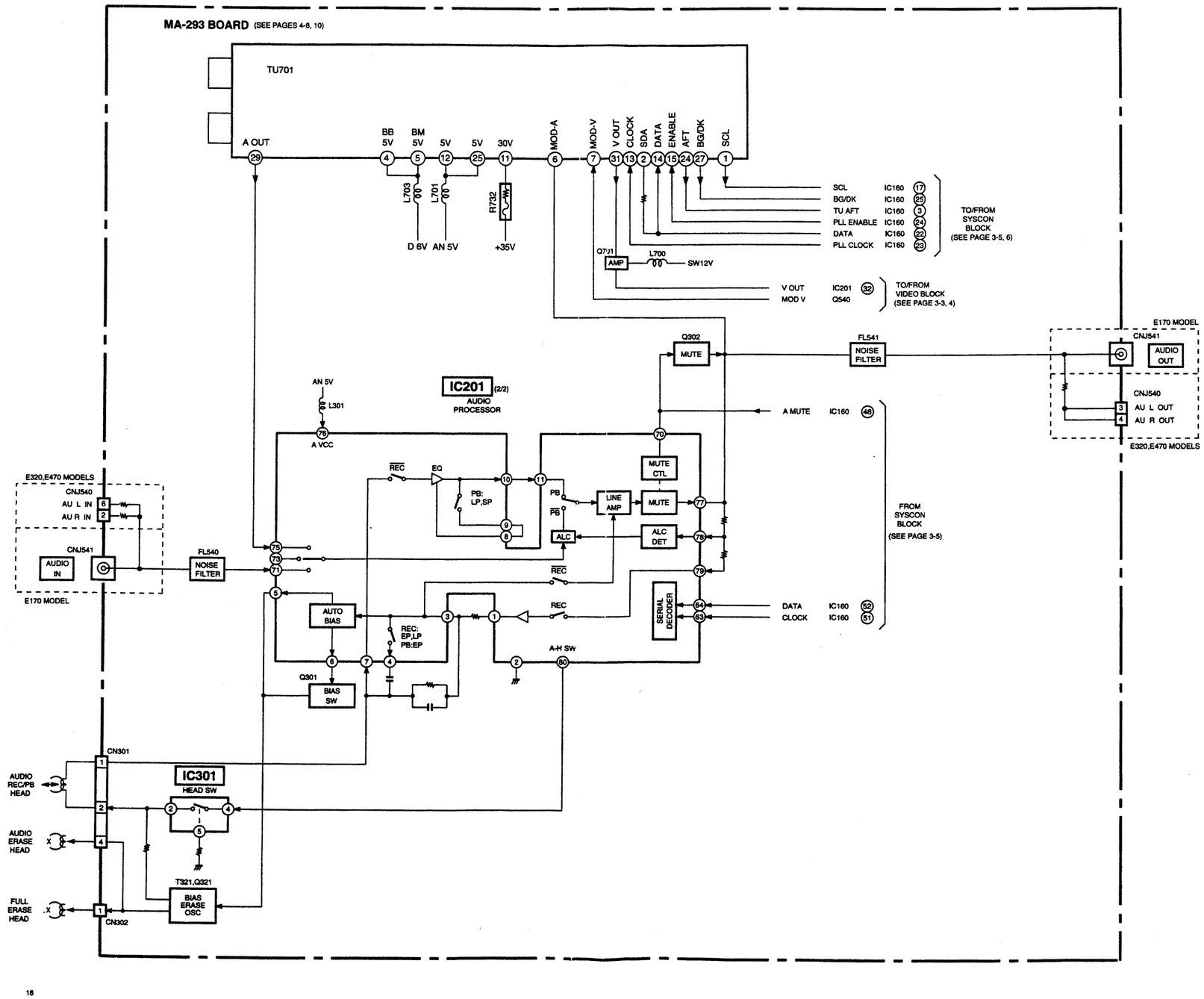

16

3-5. POWER BLOCK DIAGRAM

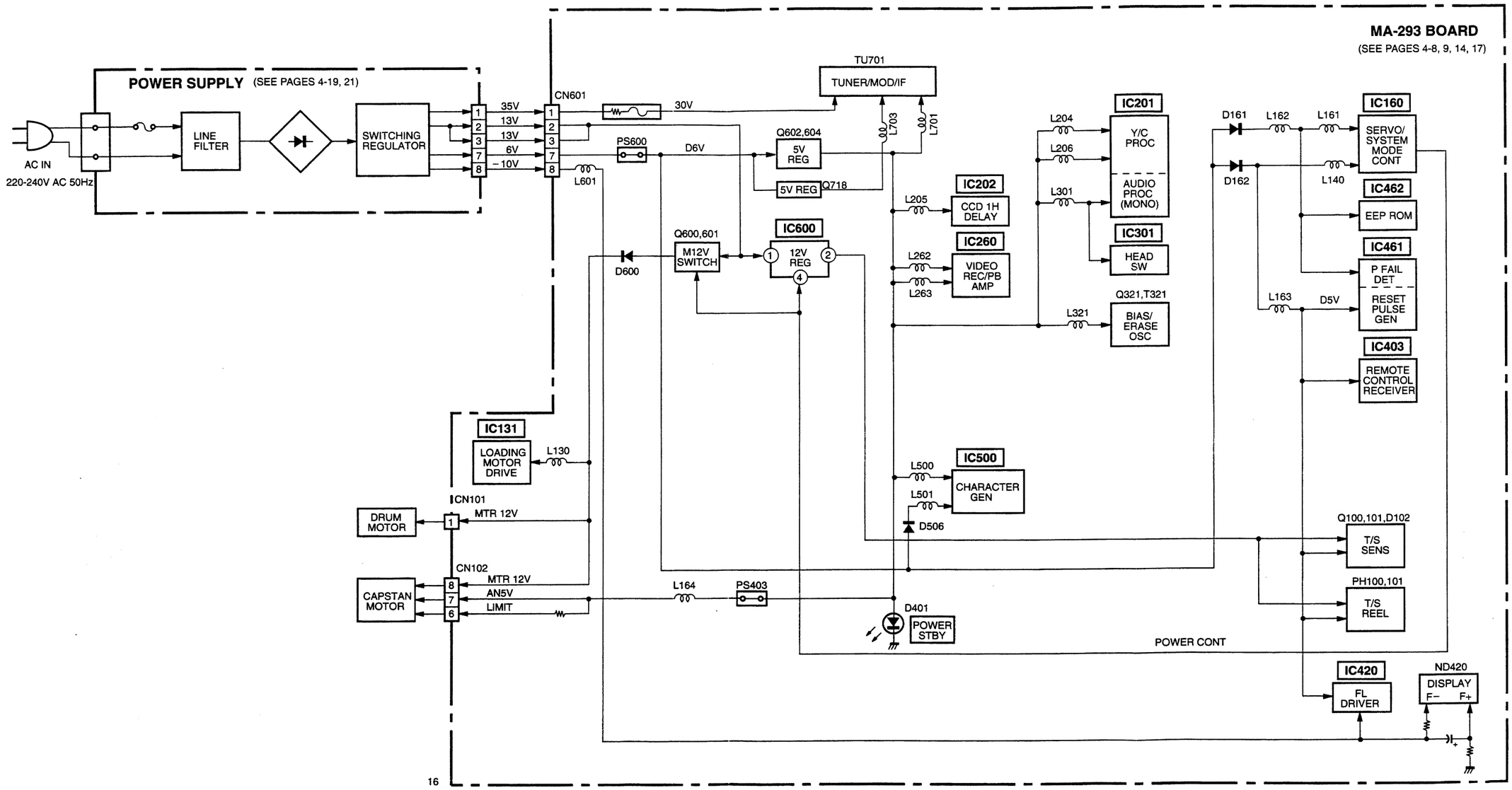

16

SECTION 4
PRINTED WIRING BOARDS AND SCHEMATIC DIAGRAMS

. FRAME SCHEMATIC DIAGRAM

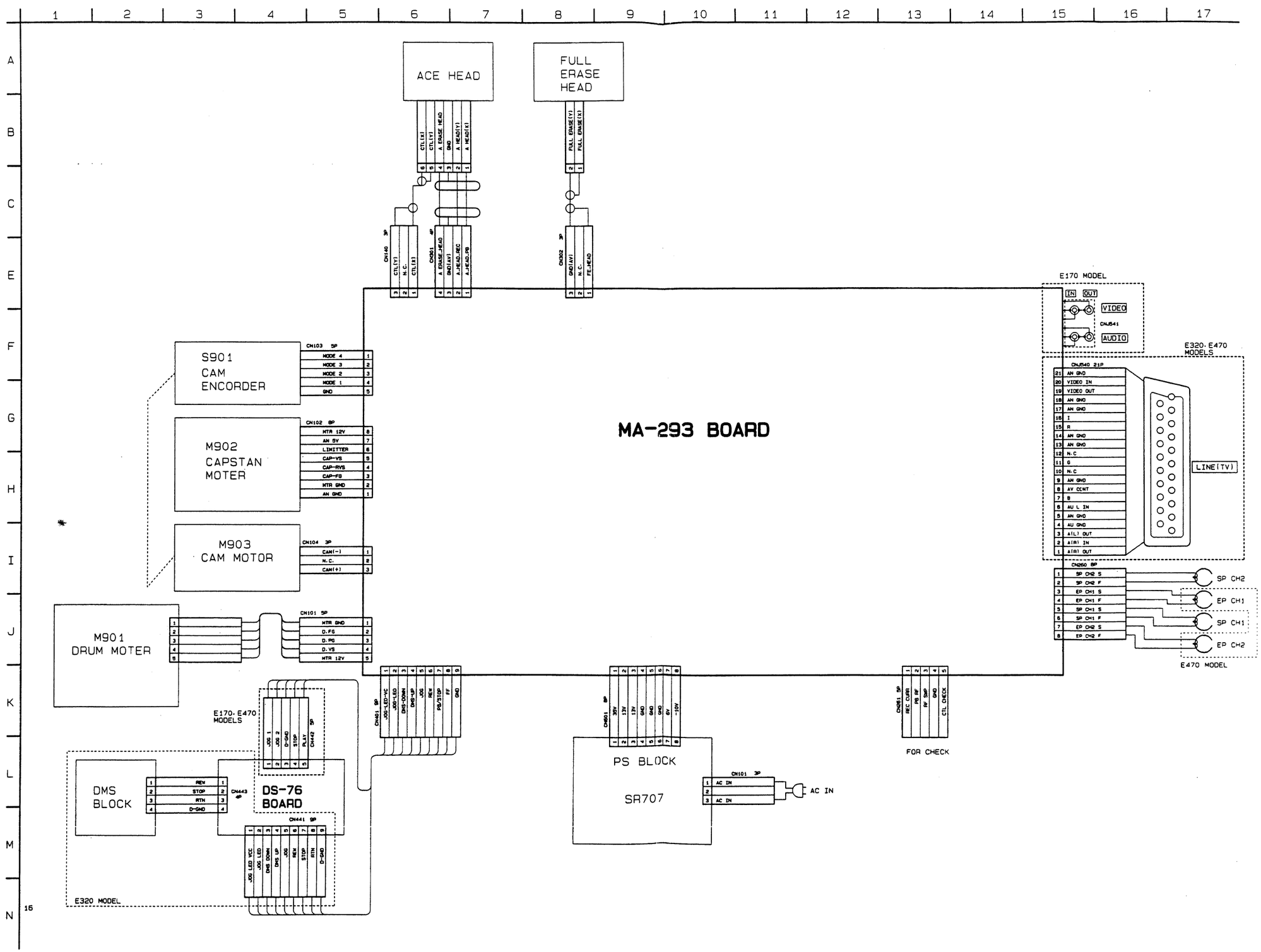

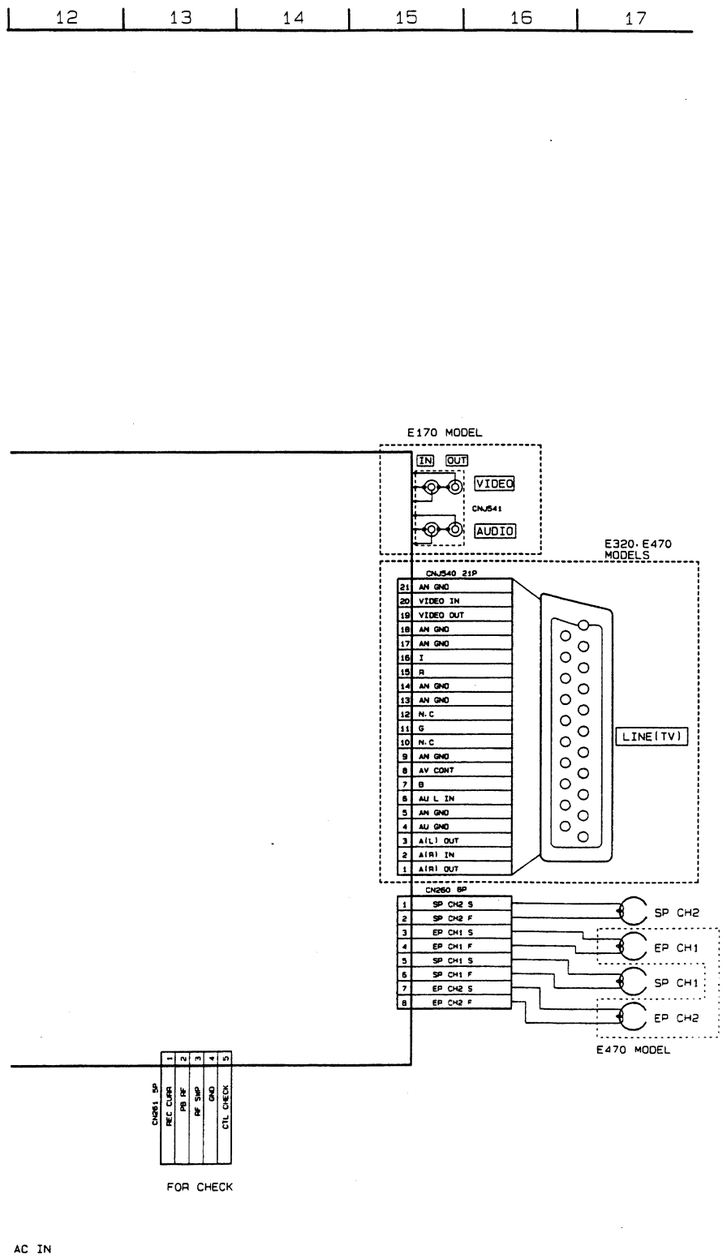

THIS NOTE IS COMMON FOR PRINTED WIRING BOARDS AND SCHEMATIC DIAGRAMS.
(In addition to this, the necessary note is printed in each block.)

- **For printed wiring boards.**
- ▬ : Pattern from the side which enables seeing.

Caution :	
Pattern face side: (Conductor Side)	Parts on the pattern face side seen from the pattern face are indicated.
Pattern face side: (Component Side)	parts on the parts face side seen from the parts face are indicated.

- **For schematic diagrams.**
- Caution when replacing chip parts.
  New parts must be attached after removal of chip.
  Be careful not to heat the minus side of tantalum capacitor, because it is damaged by the heat.
- All resistor are in ohms, 1/4W unless otherwise noted.
  Chip resistor are 1/10W unless otherwise noted.
  kΩ: 1000Ω, MΩ, : 1000kΩ.
- All capacitors are in μF unless otherwise noted. pF : μμF. 50V or less are not indicated except for electrolytics and tantalums.
- ▭ : panel designation.
- △ : internal component.
- ▬ : B+Line. *
- ▬▬ : B+Line. *
- ▨ : IN/OUT direction of (+,–) B LINE. *
- Circled numbers refer to waveforms. *
- Readings are taken with a color-bar signal input.
- Voltage are dc between ground and measurement points.*
- Rradings are taken with a dijital multimeter (DC10MΩ).*
- Voltage variations may be noted due to normal production tolerances.*

When indicating parts by reference number, please include the board name.

- * : indicated by the color red.

FRAME SCHEMATIC DIAGRAM

. PRINTED WIRING BOARDS AND SCHEMATIC DIAGRAMS

MA-293 (MAIN) PRINTED WIRING BOARD

— Ref. No. MA-293 Board; 1,000 Series —

There are

MA-293 BOARD (CONDUCTOR SIDE)

293 BOARD

40	A-4	IC301	C-7
41	A-4	IC403	J-9
		IC420	I-7
1	A-7	IC461	I-9
2	E-3	IC462	F-10
3	G-3		
4	H-3	IC500	C-1
0	I-12	IC600	H-2
0	B-10	PH100	H-5
1	A-9	PH101	I-7
1	B-6		
2	A-6	Q100	F-11
1	I-1	Q101	F-2
		Q102	F-7
1	G-1	Q201	C-6
		Q202	C-6
	F-7		
	I-13	Q208	D-5
	I-8	Q209	F-6
	I-8	Q210	E-6
	D-7	Q211	E-6
		Q260	C-10
	E-8		
	J-13	Q301	C-7
	I-12	Q302	D-7
	D-1	Q321	C-7
	B-3	Q500	C-2
		Q501	D-2
	E-2		
	D-2	Q540	B-4
	F-2	Q600	E-2
	D-3	Q601	F-2
	A-12	Q602	E-1
		Q604	F-2
	H-1		
)	I-11	Q702	D-12
	D-6	Q718	B-13
:	E-6		
)	C-10		

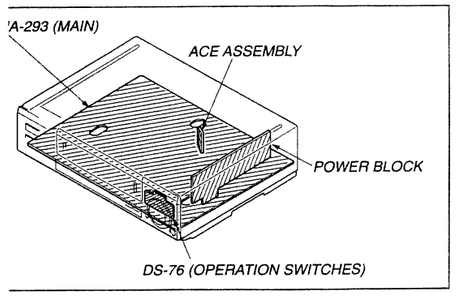

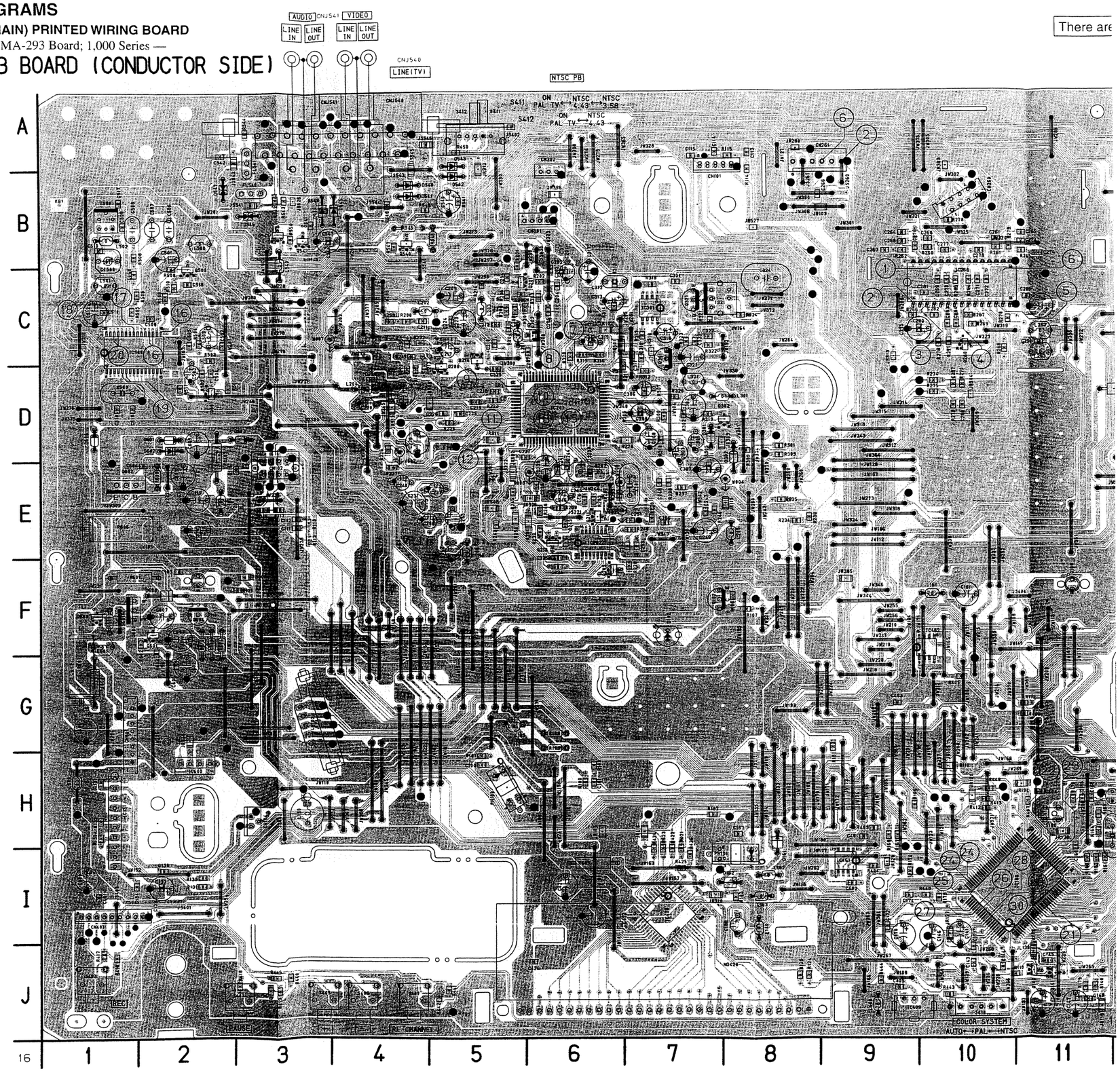

There are few cases that the part printed on this diagram isn't mounted in this model.

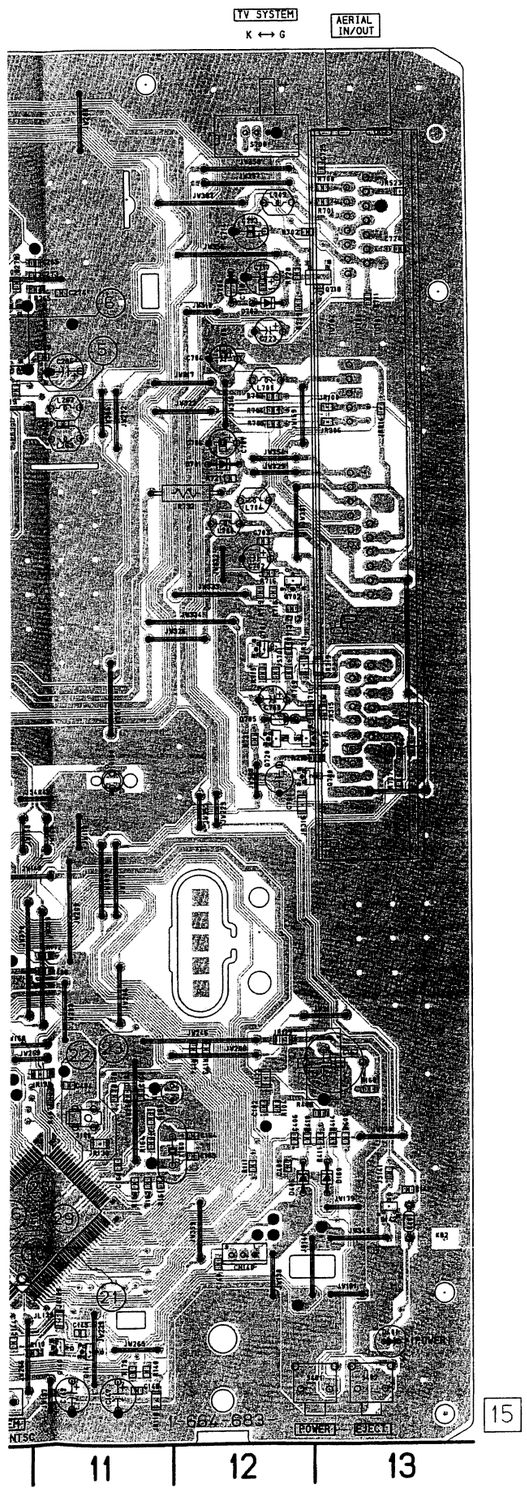

MA-293 (TUNER) SCHEMATIC DIAGRAM

— Ref. No. MA-293 Board; 1,000 Series —

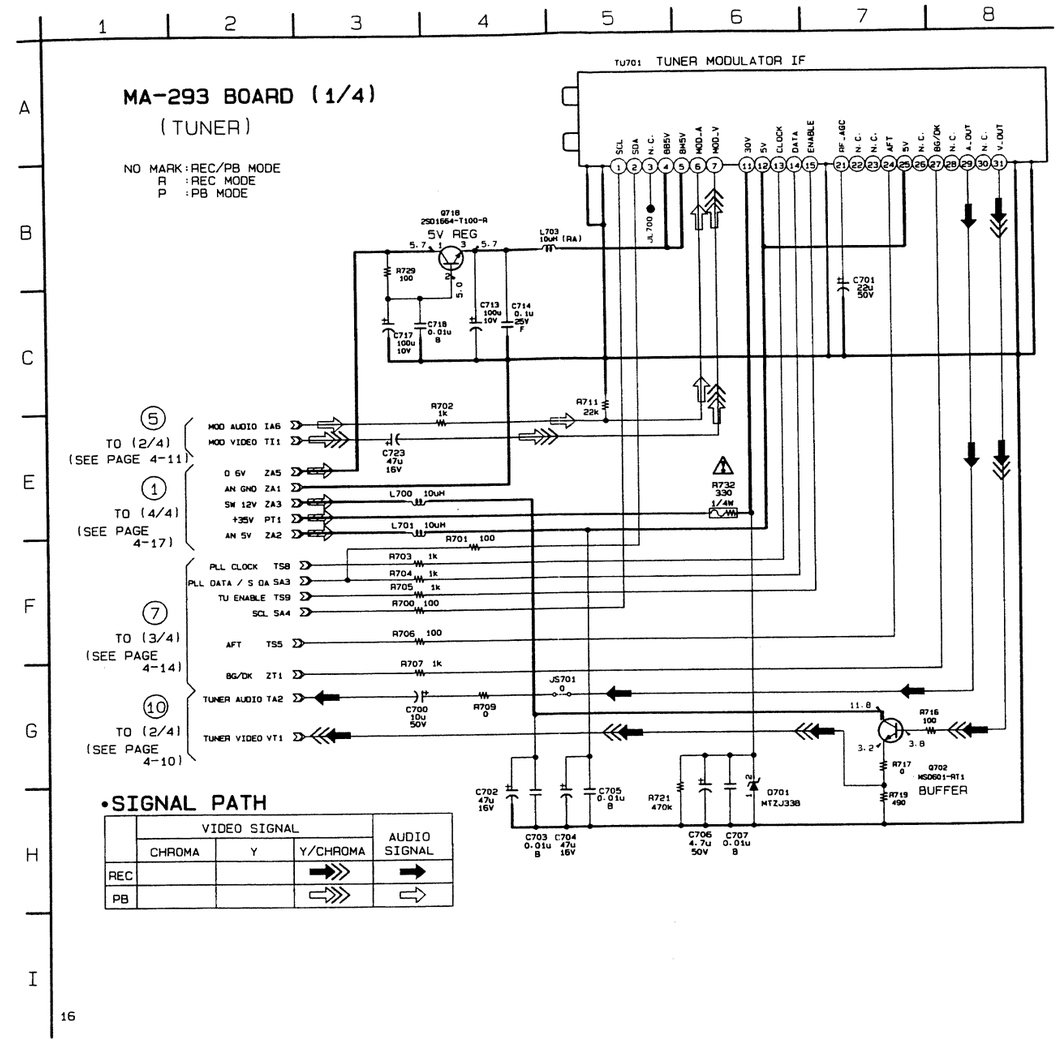

Note : The components identified by mark ⚠ or dotted line with mark ⚠ are critical for safety. Replace only with part number specified.

1A-293 (VIDEO, AUDIO) SCHEMATIC DIAGRAM

- Ref. No. MA-293 Board; 1,000 Series —

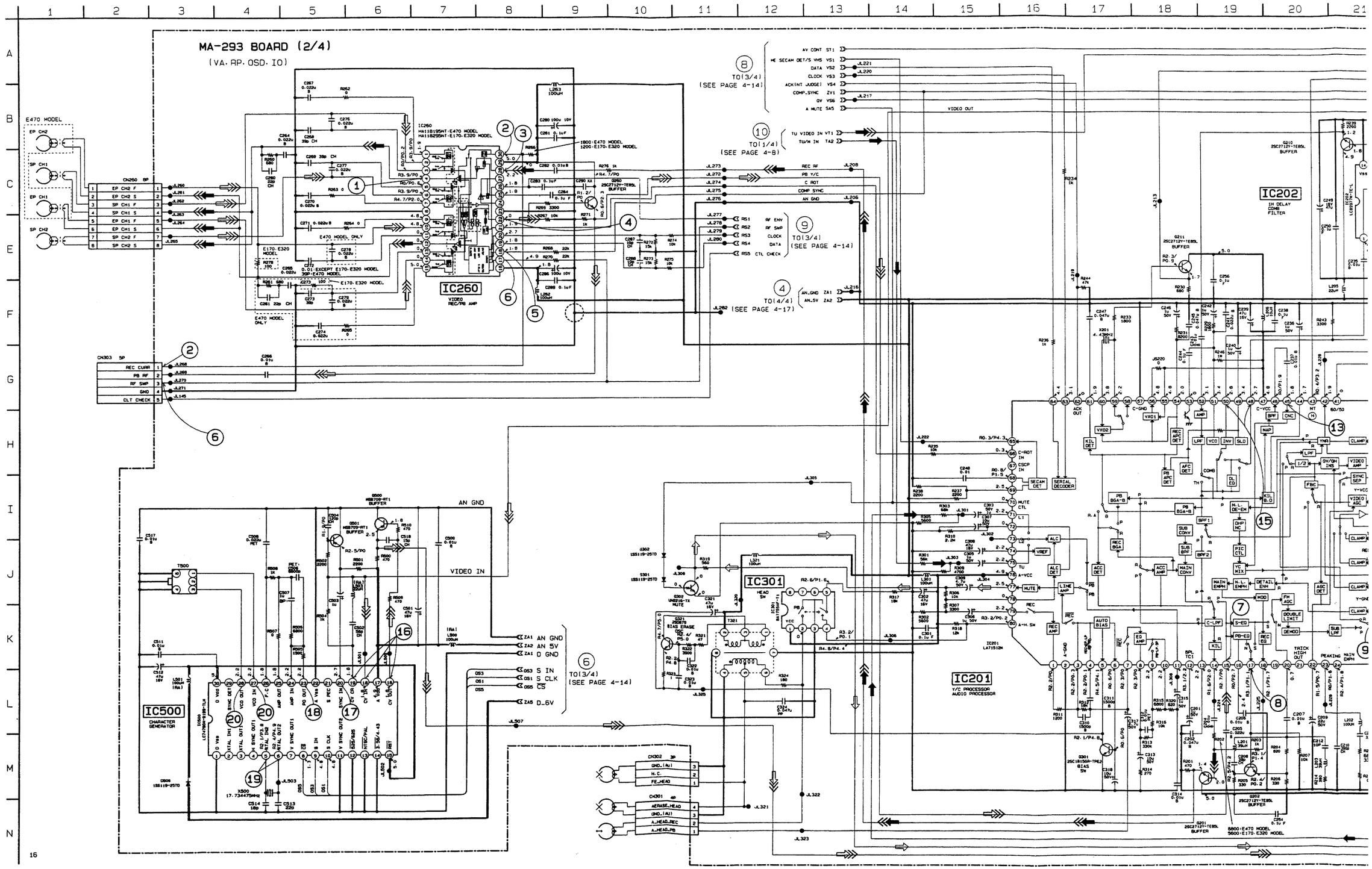

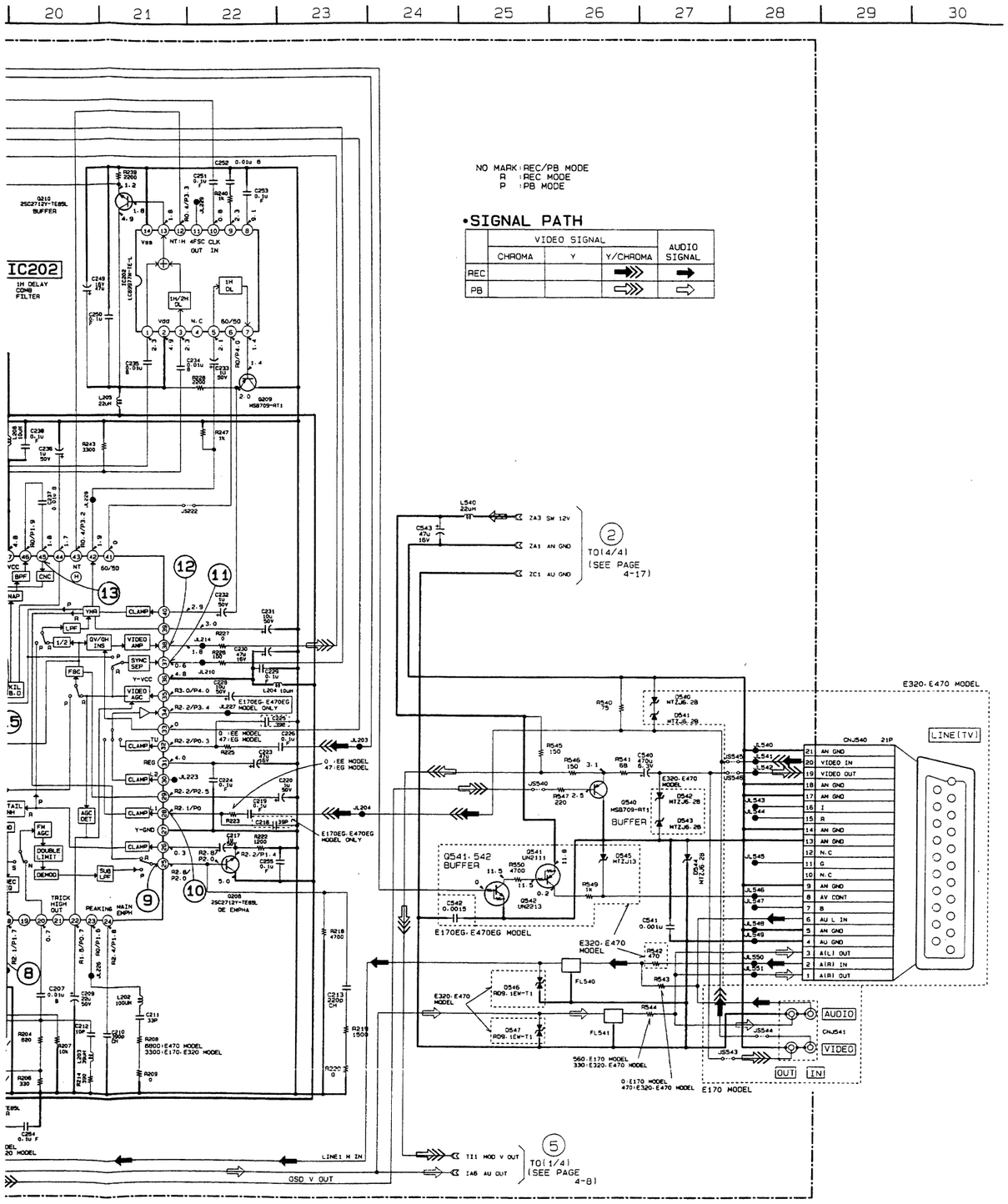

MA-293 BOARD (1/2)

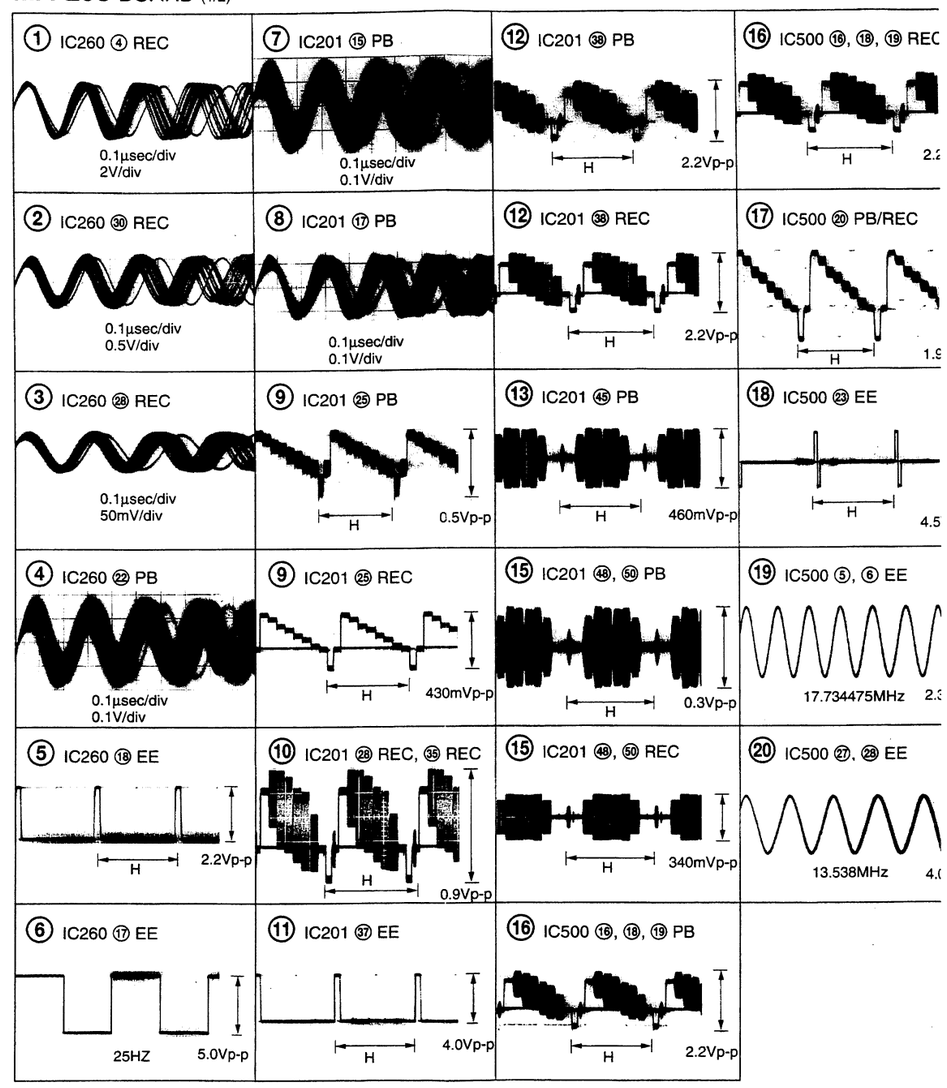

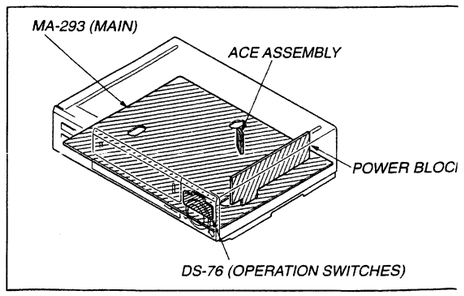

VIDEO, AU
MA-293

6 (OPERATON SWITCHES) PRINTED WIRING BOARD

f. No. DS-76 Board; 1,000 Series —

'e are few cases that the part printed on this diagram isn't mounted in this model.

-76 BOARD (CONDUCTOR SIDE)

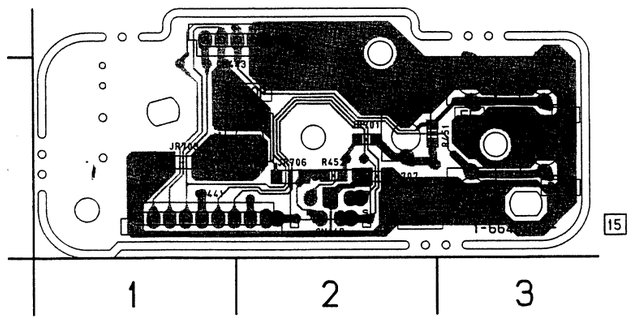

-293 BOARD (2/2)

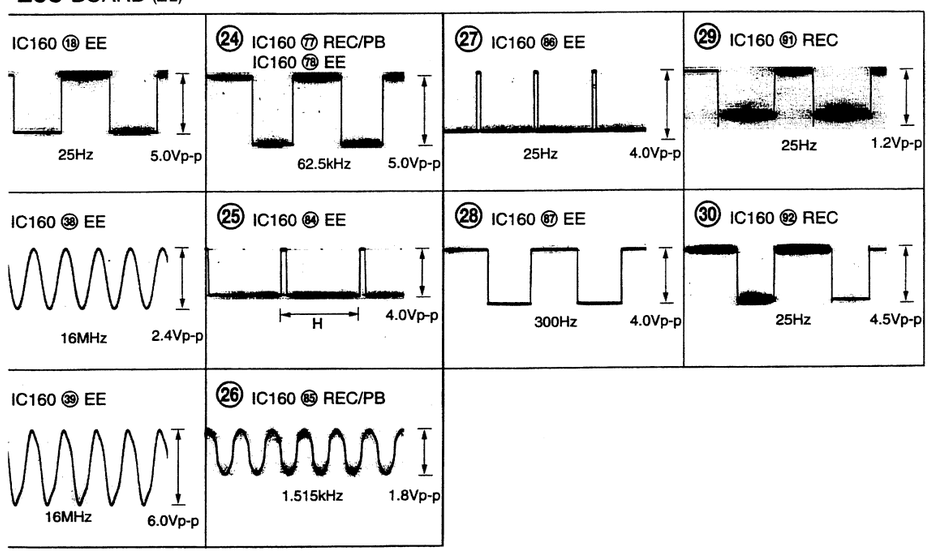

MA-293 (SERVO, SYSTEM CONTROL), DS-76 (OPERATION SWITCHES) SCEMATIC DIAGRAM

— Ref. No. DS-76 Board; 1,000 Series —

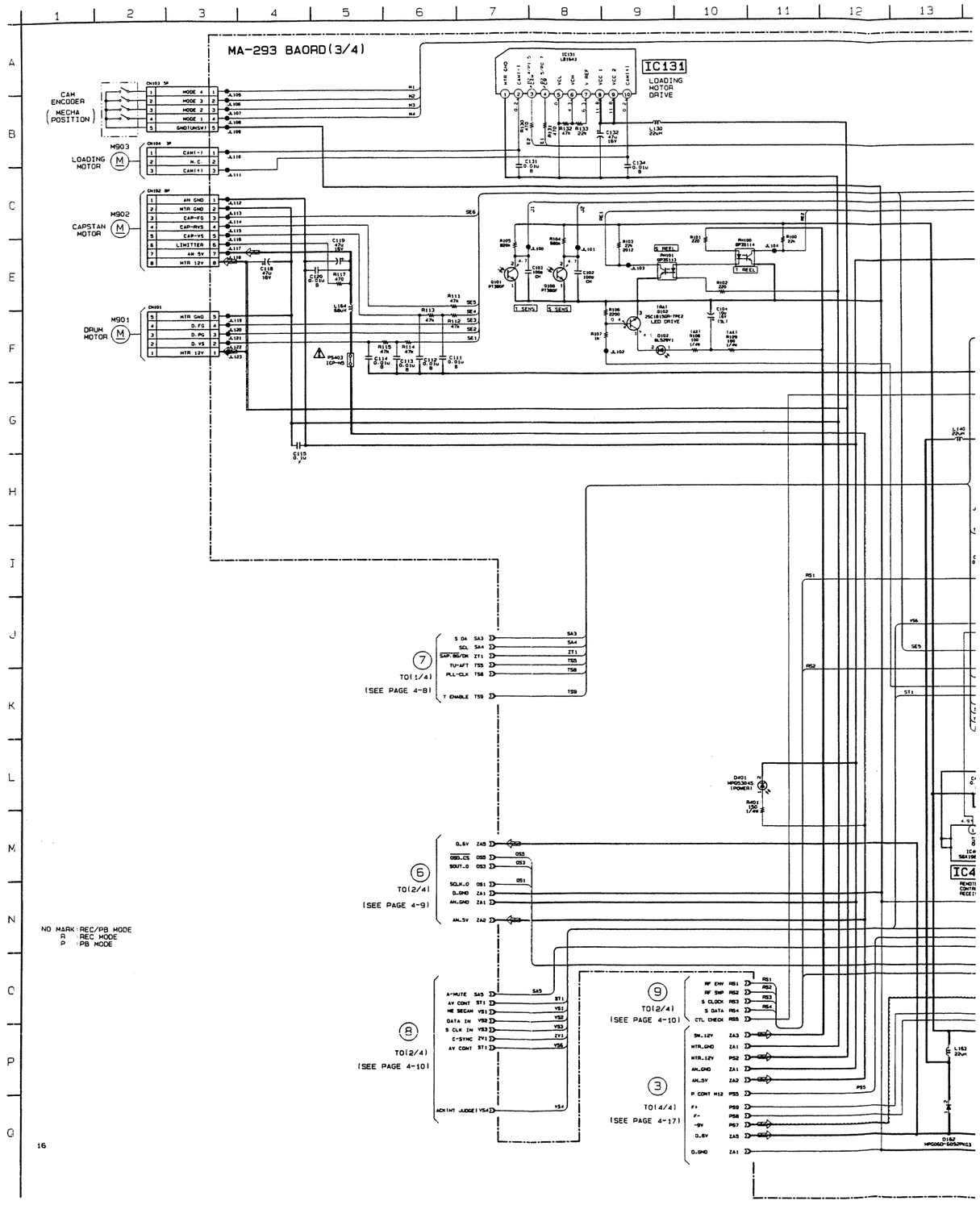

• See page 4-6 for MA-293 printed wiring board.

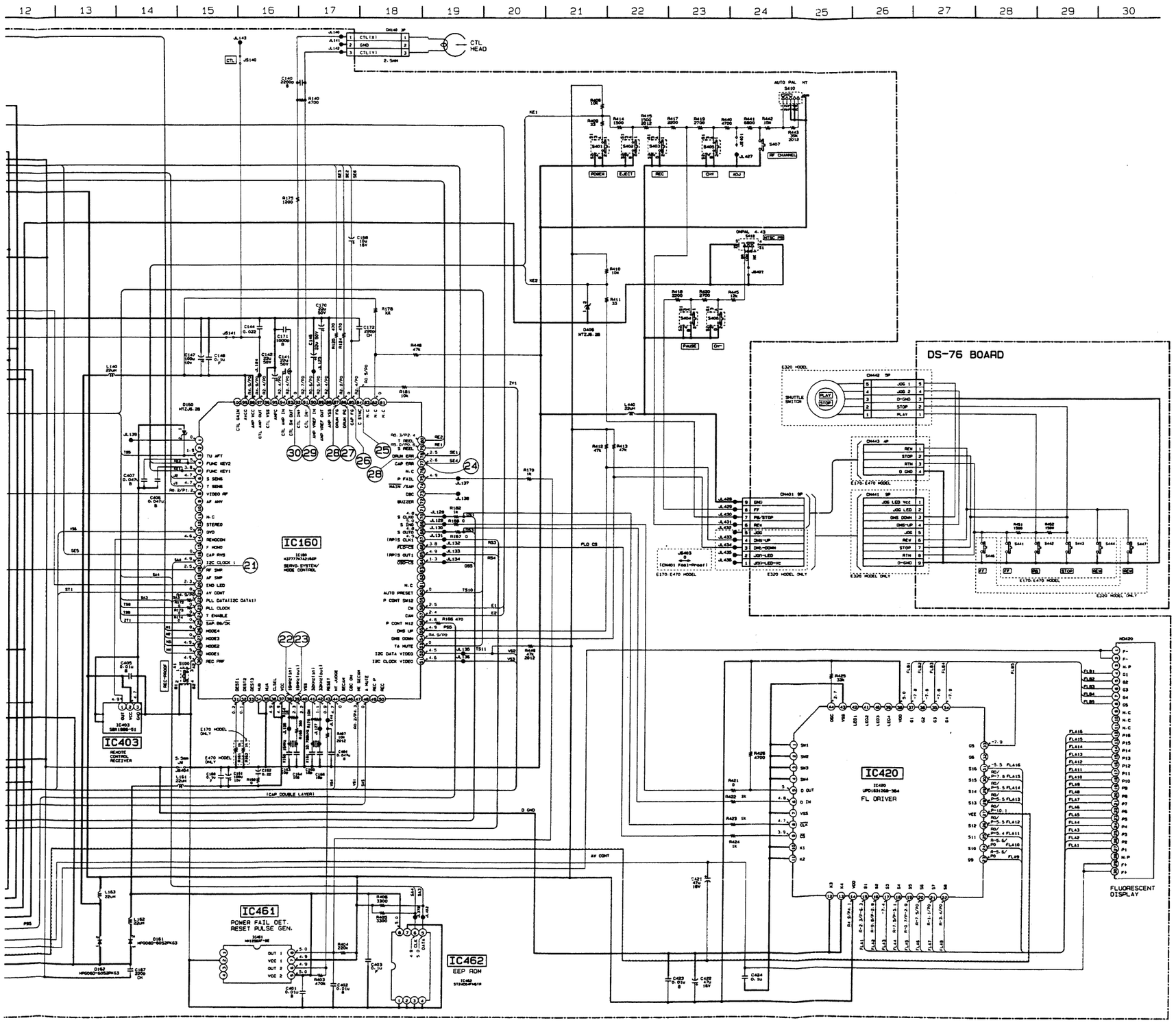

Note : The components identified by mark ⚠ or dotted line with mark ⚠ are critical for safety. Replace only with part number specified.

MA-293 (POWER SUPPLY) SCHEMATIC DIAGRAM
— Ref. No. MA-293 Board; 1,000 Series —

• See page 4-6 for MA-293 printed wiring board.

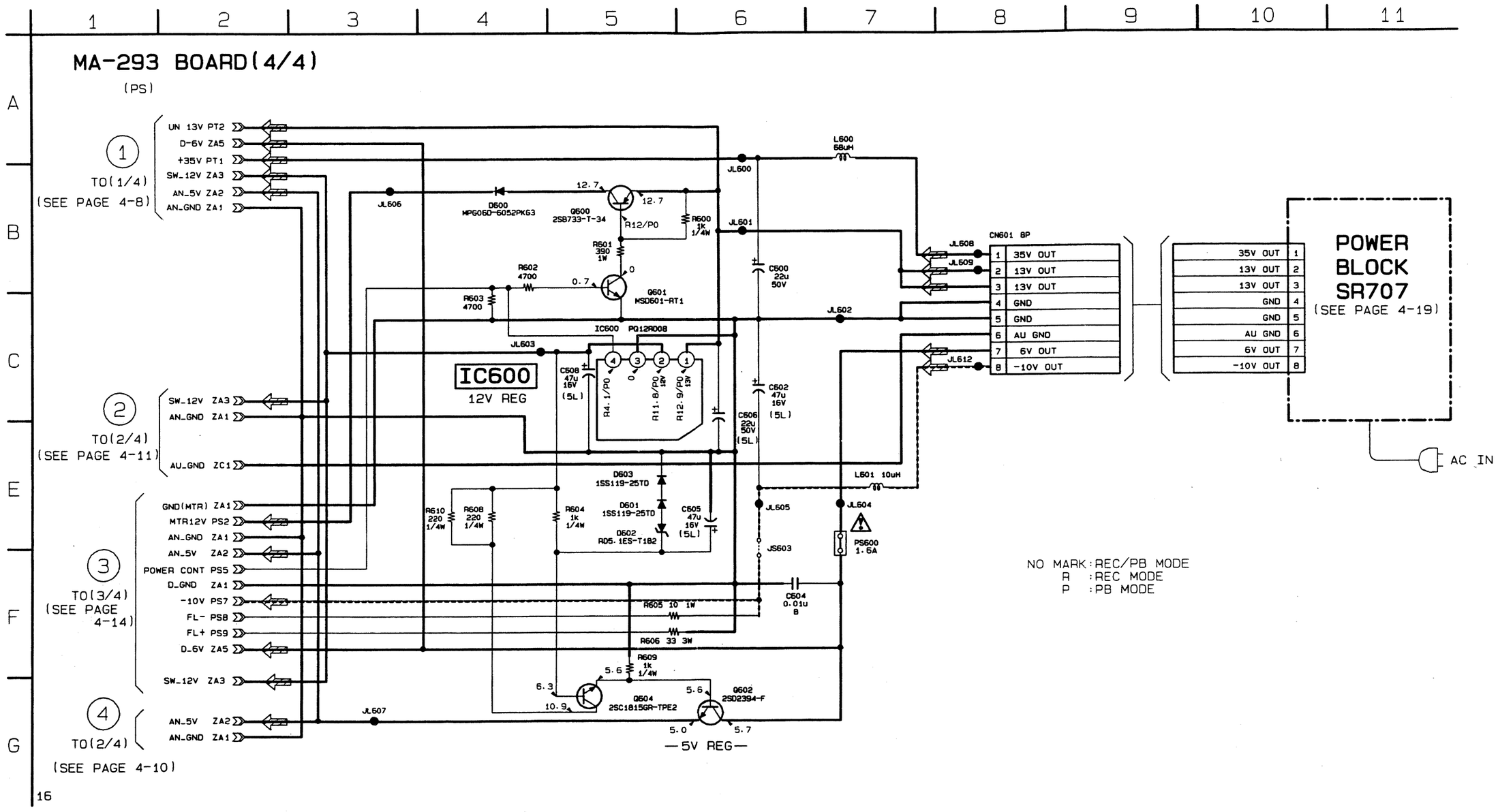

Note : The components identified by mark ⚠ or dotted line with mark ⚠ are critical for safety. Replace only with part number specified.

POWER BLOCK SR707 (SWITCHING REGULATOR) PRINTED WIRING BOARD AND SCHEMATIC DIAGRAM
— Ref. No. SR707 Board; 5,000 Series —

POWER BLOCK SR707

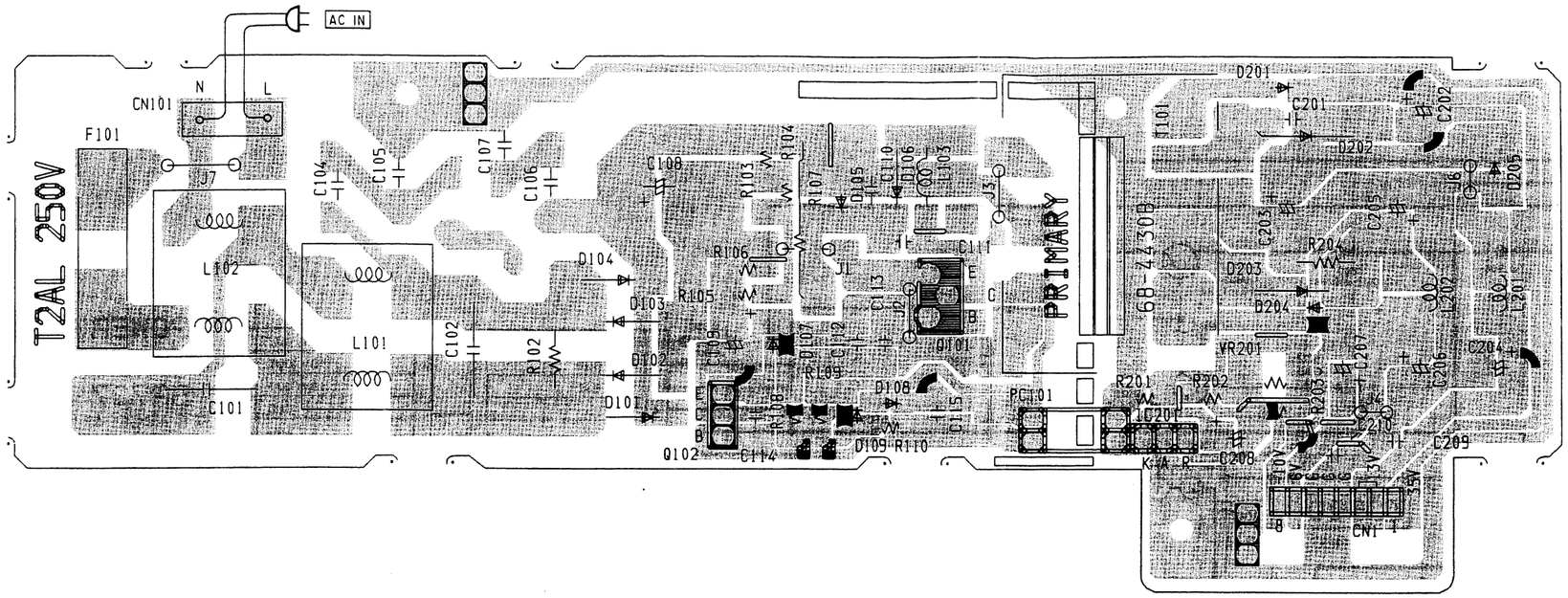

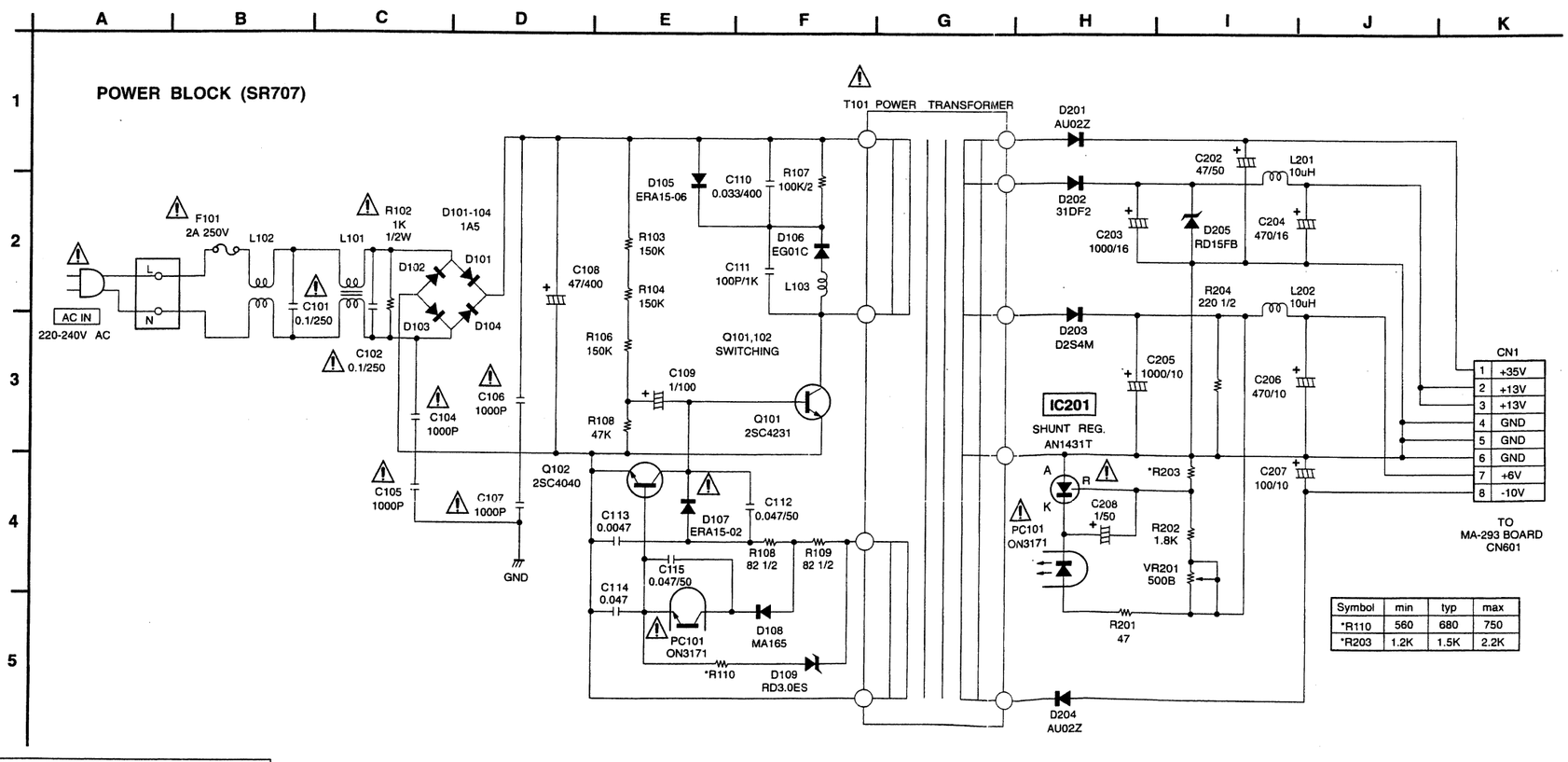

Symbol	min	typ	max
*R110	560	680	750
*R203	1.2K	1.5K	2.2K

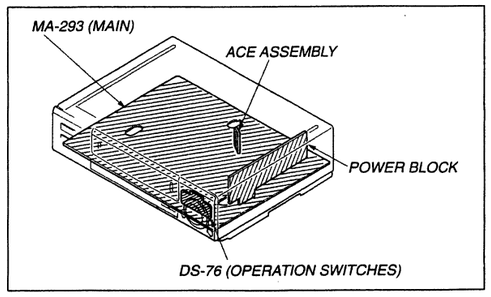

Note : The components identified by mark ⚠ or dotted line with mark ⚠ are critical for safety. Replace only with part number specified.

SWITCHING REGULATOR
POWER BLOCK SR707

SECTION 5
REPAIR PARTS LIST

5-1. EXPLODED VIEWS

NOTE:

- -XX, -X mean standardized parts, so they may have some differences from the original one.
- Items marked "*" are not stocked since they are seldom required for routine service. Some delay should be anticipated when ordering these items.
- The mechanical parts with no reference number in the exploded views are not supplied.
- Hardware (#mark) list is given in the last of this parts list.

The components identified by mark ⚠ or dotted line with mark ⚠ are critical for safety. Replace only with part number specified.

5-1-1. FRONT PANEL ASSEMBLY AND CASE

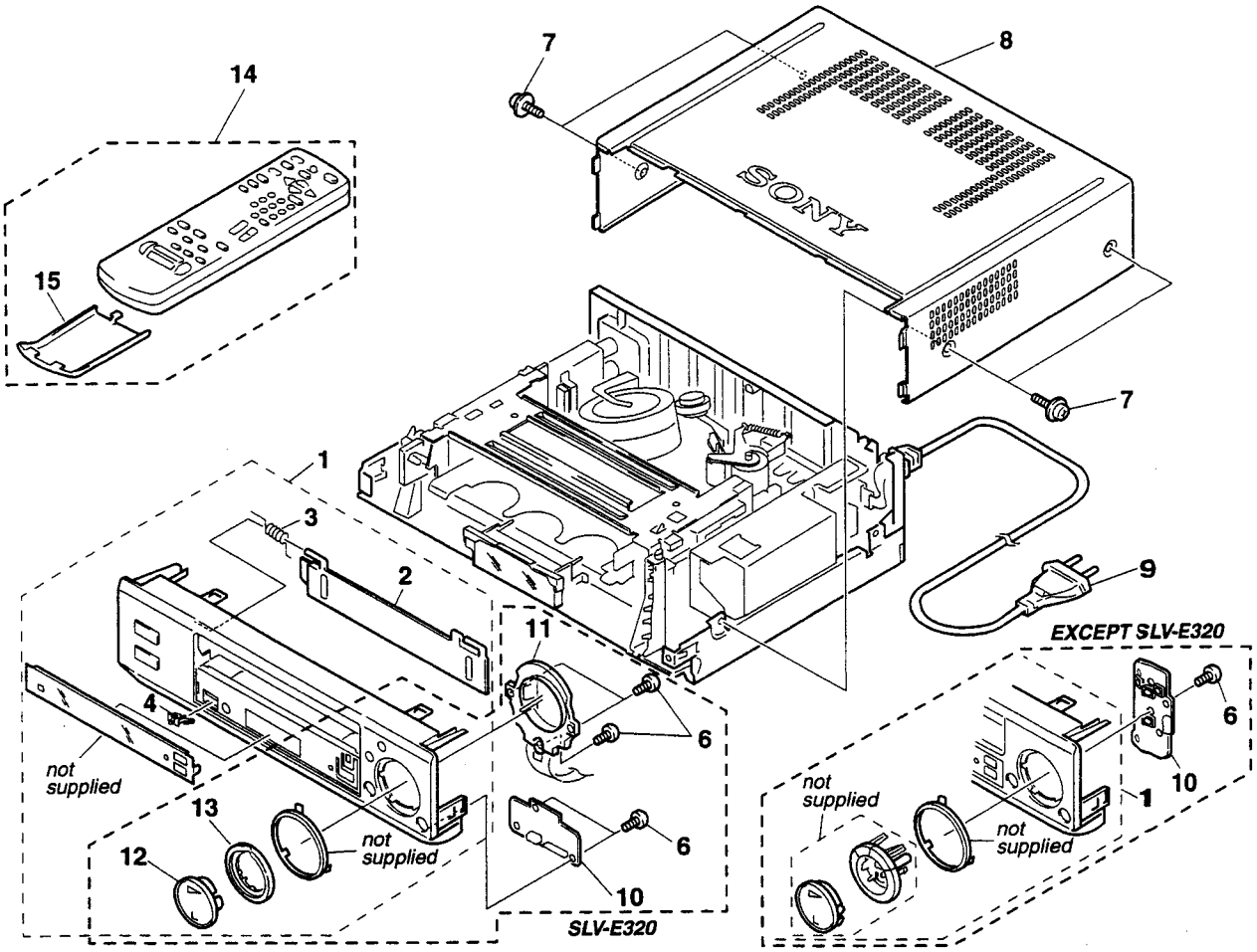

Ref. No.	Part No.	Description	Remarks
1	X-3946-769-1	PANEL ASSY, FRONT (E470)	
1	X-3946-771-1	PANEL ASSY, FRONT (E320)	
1	X-3946-773-1	PANEL ASSY, FRONT (E170)	
2	3-972-774-01	DOOR, CASSETTE	
3	3-953-432-01	SPRING (GE), FL	
4	3-972-526-01	KNOB, SLIDE	
6	4-921-277-41	SCREW (B2.6X8), TAPPING, BIND	
7	3-710-901-11	SCREW (TP3X8), CASE	
* 8	3-973-507-11	CASE (BA), UPPER	
⚠9	1-782-000-21	CORD, POWER	
* 10	1-664-684-15	PWB, DS-76	
11	1-762-844-21	SWITCH, ROTARY (E320)	
12	3-972-782-11	BUTTON, CENTER (E320)	
13	3-973-077-11	RING, CHANGE SPEED (E320)	
14	1-475-025-11	REMOTE COMMANDER (RMT-V198)(E470)	
14	1-475-025-31	REMOTE COMMANDER (RMT-V198B)(E170,E320)	
15	3-709-128-01	COVER, BATTERY (E470)	

5-1-2. CHASSIS ASSEMBLY

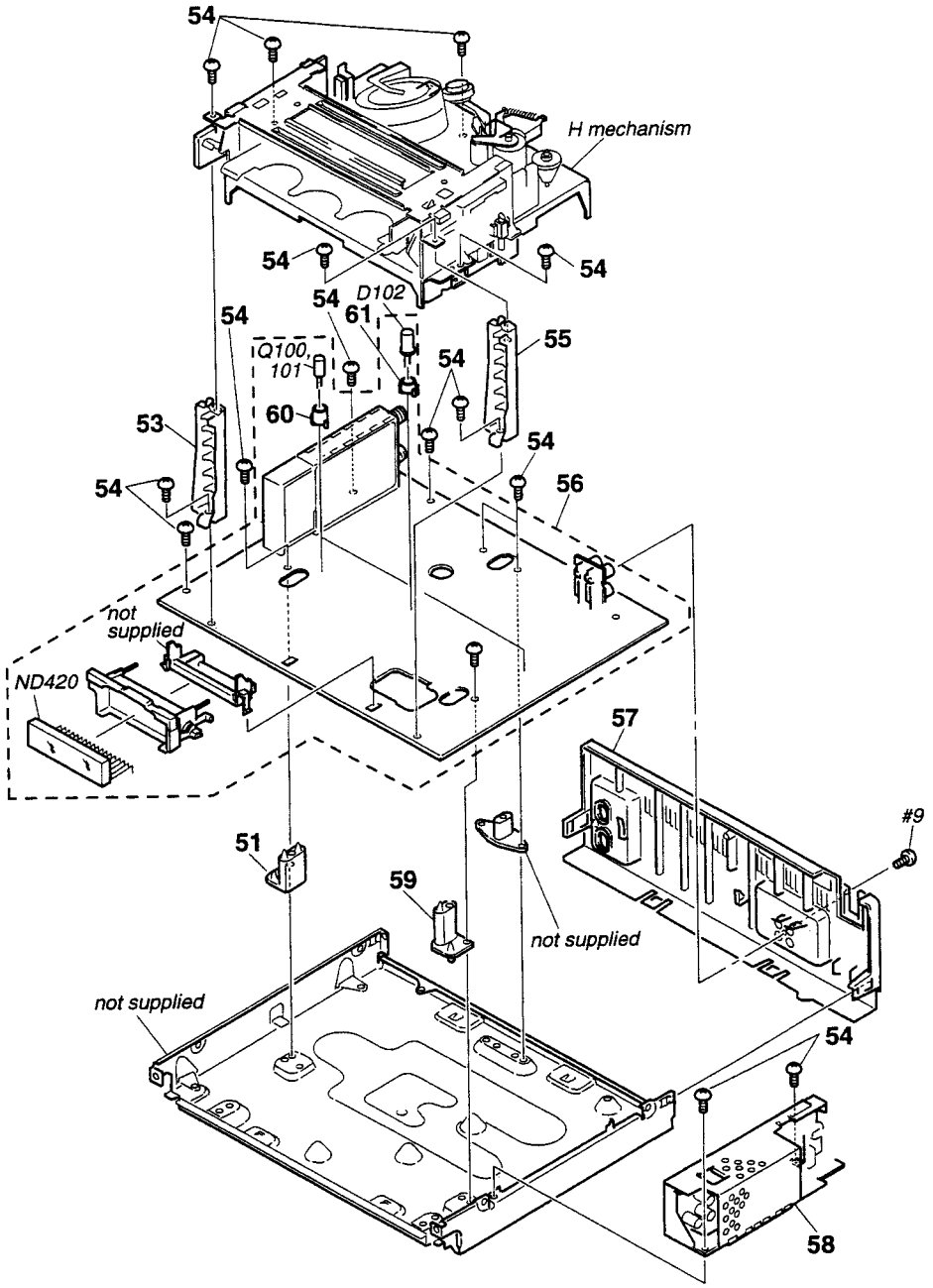

Ref. No.	Part No.	Description	Remarks
51	3-959-381-01	BASE (L), MD	
53	3-959-388-01	BASE (L), FL	
54	3-970-608-21	SUMITITE (B3), +BV	
55	3-959-389-01	BASE (R), FL	
* 56	A-6791-231-A	MA-293G BOARD,COMPLETE (E170EG)	
* 56	A-6791-232-A	MA-293H BOARD,COMPLETE (E320EE)	
* 56	A-6791-233-A	MA-293I BOARD,COMPLETE (E470EG)	
* 56	A-6791-275-A	MA-293K BOARD,COMPLETE (E470EE)	
* 56	A-6791-276-A	MA-293J BOARD,COMPLETE (E170EE)	
* 57	3-973-508-01	PANEL, REAR (E170)	

Ref. No.	Part No.	Description	Remarks
* 57	3-973-508-11	PANEL, REAR (E320,E470)	
⚠58	1-468-188-11	POWER BLOCK	
59	3-959-383-01	BASE (R), MD	
* 60	3-960-273-01	SPACER, TOP END	
* 61	3-960-274-01	SPACER, LED	
D102	8-719-048-26	DIODE GL528V1	
ND420	1-517-596-11	TUBE, FLUORESCENT INDICATOR	
Q100	8-729-025-92	PHOTO TRANSISTOR PT380F	
Q101	8-729-025-92	PHOTO TRANSISTOR PT380F	

The components identified by mark ⚠ or dotted line with mark ⚠ are critical for safety.
Replace only with part number specified.

5-1-3. MECHANISM DECK ASSEMBLY-1

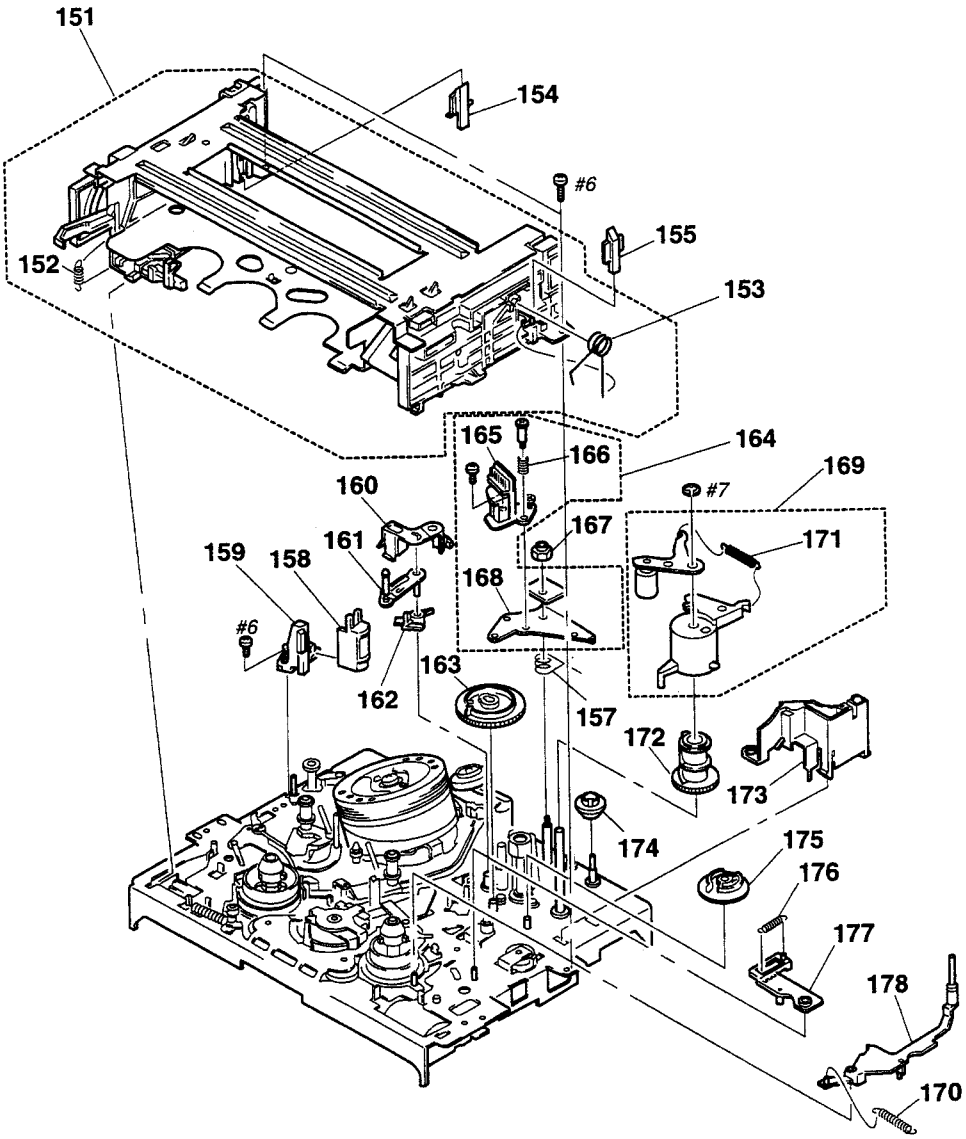

Ref. No.	Part No.	Description	Remarks
151	A-6759-603-A	FL BLOCK ASSY	
152	3-958-467-01	SPRING, TENSION COIL	
153	3-970-471-01	SPRING, TORSION	
154	3-958-488-03	PLATE, LIGHT GUIDE, END SENSOR	
155	3-970-473-01	PLATE, LIGHT GUIDE, TOP SENSOR	
157	3-958-487-01	SPRING, (ACE) TORSION COIL	
158	1-500-144-11	HEAD, FE	
159	X-3945-348-2	FEH ASSY	
160	3-962-298-01	BRACKET, TG7 TAPE	
161	X-3944-797-1	TG8 ASSY	
162	3-958-421-01	HOLDER, TG8	
163	3-958-152-01	GEAR, TG8	
164	A-6736-105-A	ACE BLOCK ASSY	
165	1-506-485-11	PIN, CONNECTOR 6P	

Ref. No.	Part No.	Description	Remarks
166	3-960-439-02	SPRING (ACE), COMPRESSION	
167	3-942-867-01	NUT, AC HEIGHT ADJUSTMENT	
168	3-958-491-11	BASE, ACE	
169	A-6746-072-A	PRESS BLOCK ASSY, PINCH	
170	3-958-505-01	SPRING (SOFT BRAKE T), TENSION	
171	3-958-455-01	SPRING (PINCH), TENSION	
172	3-958-151-01	GEAR, ELEVATOR	
173	3-958-454-01	OPNER, LID	
174	3-958-501-01	SCREW, ACE ADJUSTMENT	
175	3-958-153-01	GEAR, PRESS	
176	3-958-462-01	SPRING (RVS BRAKE), TENSION	
177	X-3943-885-1	ARM ASSY, RVS BRAKE	
178	X-3943-882-1	BRAKE (T) ASSY, SOFT	

5-1-4. MECHANISM DECK ASSEMBLY-2

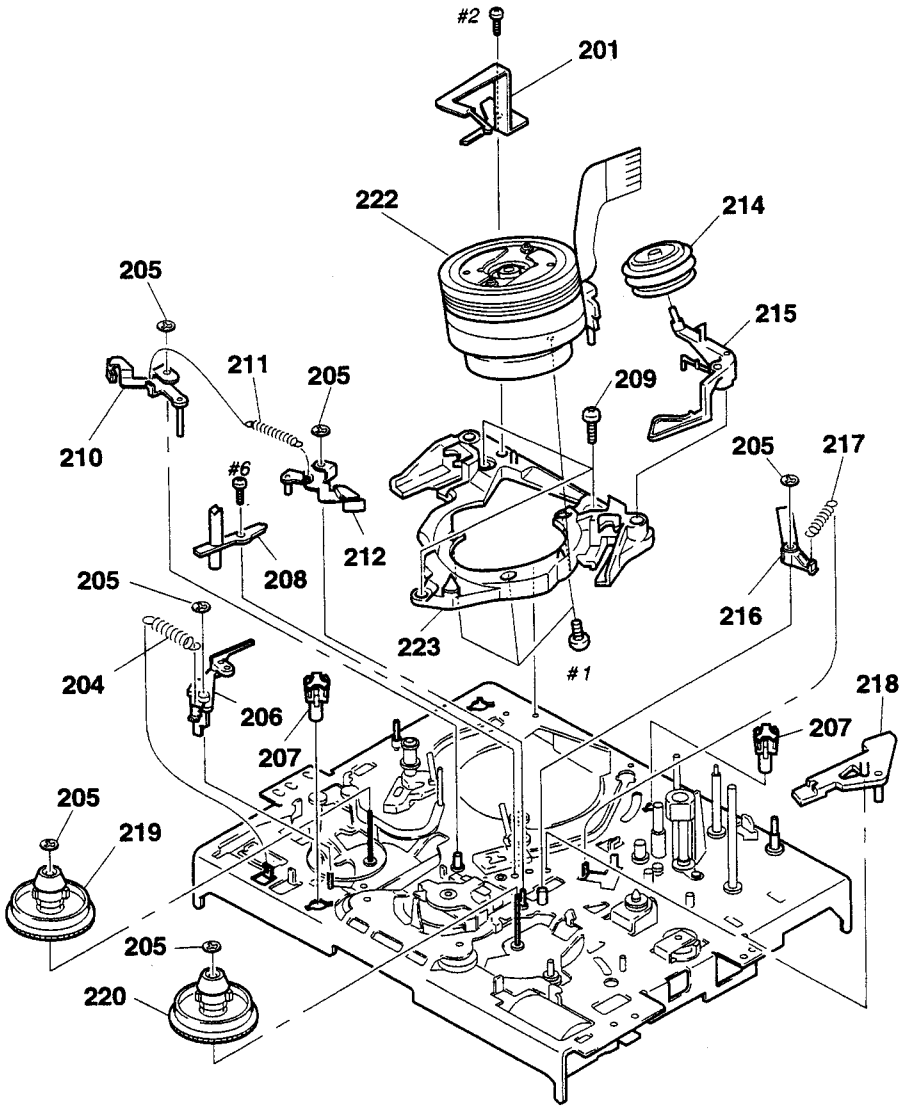

Ref. No.	Part No.	Description	Remarks
201	X-3943-899-8	GROUND ASSY, SHAFT (E470)	
202	2-643-205-01	SCREW	
204	3-958-443-01	SPRING, STRETCH COIL SPRING	
205	3-669-595-00	WASHER (2), STOPPER	
206	3-958-450-01	BRAKE (S), SOFT	
207	3-958-390-01	SHAFT, PC BOARD	
208	3-958-391-01	PLATE, LIGHT GUIDE, LED	
209	3-961-441-01	SCREW (3x8)	
210	X-3945-443-1	BRAKE (S) ASSY, MAIN	
211	3-958-517-01	SPRING, TENSIONCOIL	

Ref. No.	Part No.	Description	Remarks
212	X-3945-444-1	ARM (T) ASSY, MAIN BRAKE	
214	X-3947-255-1	ROLLER ASSY, HC	
215	3-975-724-01	ARM, HC	
216	3-960-139-01	ARM, NEUTRALITY	
217	3-958-535-01	SPRING, TENSION	
218	3-960-138-01	ARM, PENDULUM COMPULSION	
219	X-3943-902-1	TABLE, REEL (S) ASSY	
220	X-3943-903-1	TABLE, REEL (T) ASSY	
222	1-759-183-11	DRUM ASSY DZH-78A-R (M901) (E170, E320)	
222	8-848-682-11	DRUM ASSY DZH-74B/Q-RP (M901) (E470)	
223	3-969-629-01	DRUM BASE	

5-1-5. MECHANISM DECK ASSEMBLY-3

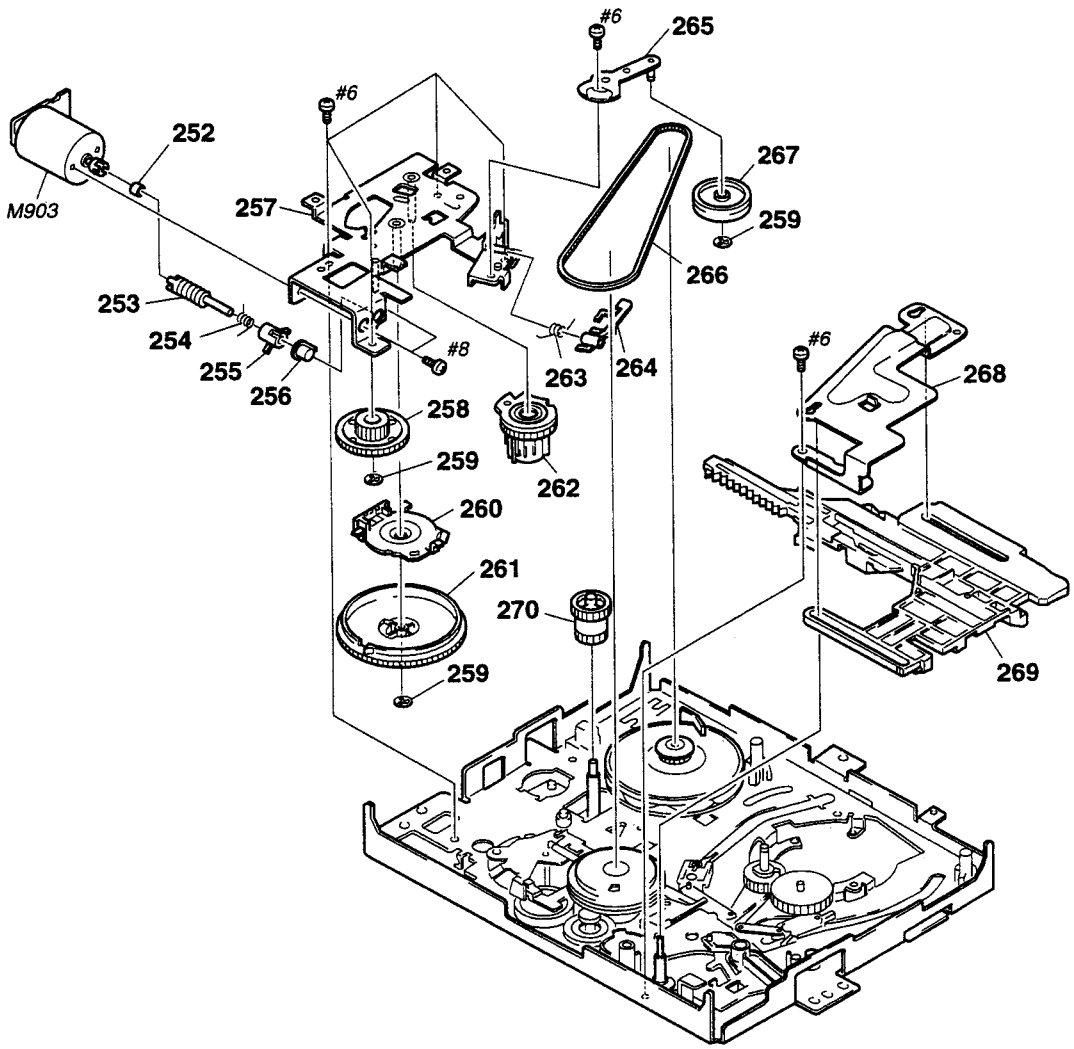

Ref. No.	Part No.	Description	Remarks
252	3-959-840-11	RUBBER, JOINT	
253	3-958-159-01	WORM	
254	3-958-460-01	SPRING, ONE-WAY	
255	3-958-160-01	PROPELLOR	
256	3-958-155-01	BEARING, CAM MOTOR	
* 257	X-3943-884-1	CHASSIS ASSY, CAM MOTOR	
258	3-958-157-02	WHEEL, WORM	
259	3-669-595-00	WASHER (2), STOPPER	
260	1-762-076-11	SWITCH, ROTARY	
261	3-958-161-07	GEAR, CAM	

Ref. No.	Part No.	Description	Remarks
262	3-958-156-03	GEAR, FL DRIVING	
263	3-958-445-01	SPRING,TORSIONCOIL(CAP BRAKE)	
264	X-3943-888-1	BRAKE ASSY, CAP	
265	X-3943-889-1	ARM ASSY, TENSION VEHICLE	
266	3-958-361-01	BELT, TIMING	
267	3-958-448-01	WHEEL, TENSION	
* 268	3-959-763-01	RETAINER	
269	3-958-163-04	SLIDER, MAIN	
270	3-958-162-02	GEAR,UPPER/LOWER COMMUNICATION	
M903	X-3943-883-1	MOTOR ASSY, CAM	

5-1-6. MECHANISM DECK ASSEMBLY-4

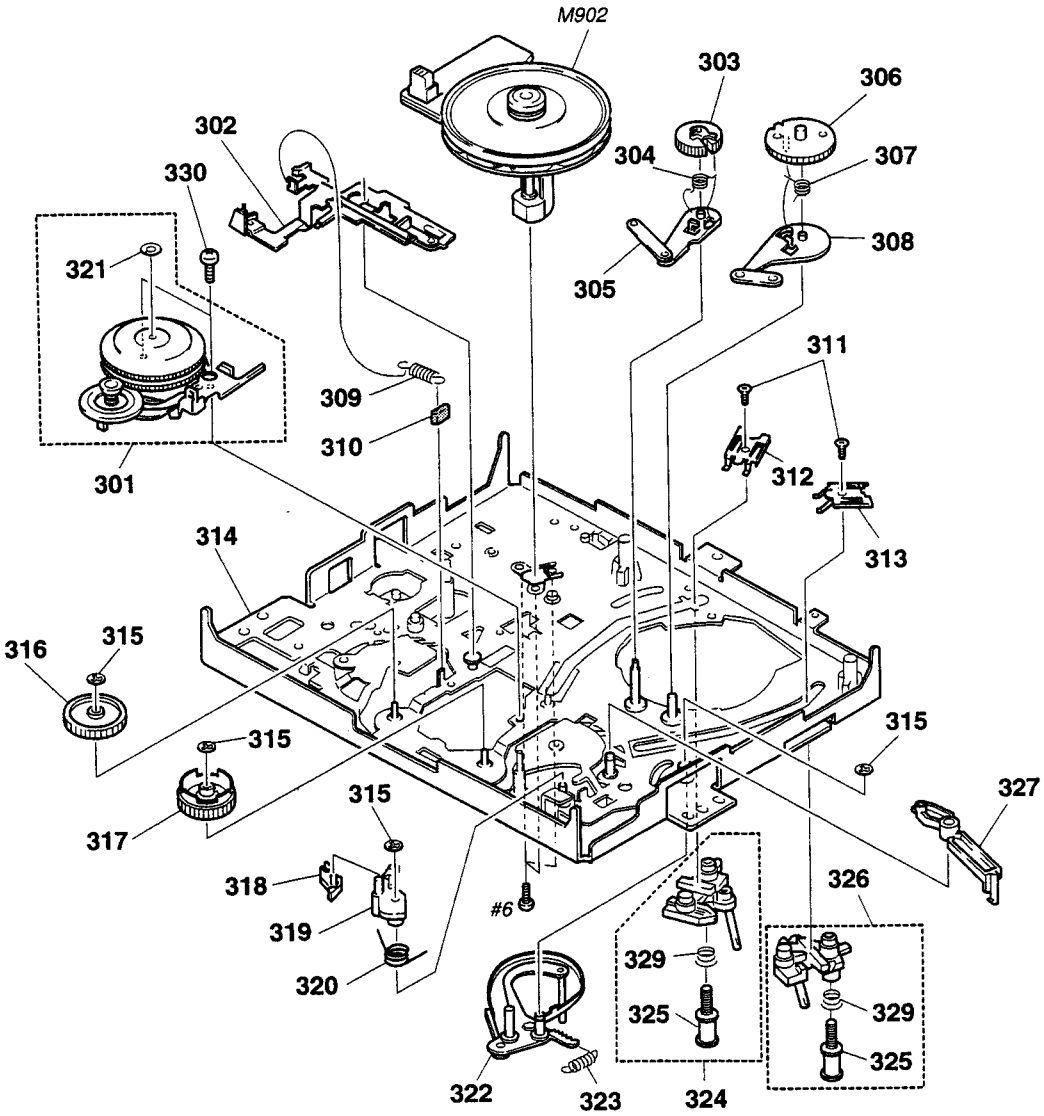

Ref. No.	Part No.	Description	Remarks
301	A-6739-102-A	RKB BLOCK ASSY	
302	X-3943-897-1	LEVER ASSY, TRIGGER	
303	3-958-485-02	GEAR (T), LOADING	
304	3-960-449-01	SPRING (T), TORSION COIL	
305	X-3943-891-3	LEVER (T) ASSY, LOADING	
306	3-958-476-01	GEAR (S), LOADING	
307	3-960-448-01	SPRING (S), TORSION COIL	
308	X-3943-890-2	LEVER (S) ASSY, LOADING	
309	3-958-529-01	SPRING (MOMENT), TENSION	
310	3-959-840-11	RUBBER, JOINT	
311	3-960-720-01	SCREW	
312	3-960-688-01	SPRING, LEAF (T), LOADING	
313	3-960-687-01	SPRING, LEAF (S), LOADING	
314	X-3945-485-4	CHASSIS ASSY, MECHANICAL	
315	3-669-595-00	WASHER (2), STOPPER	

Ref. No.	Part No.	Description	Remarks
316	3-962-960-01	GEAR (T-K), IDLER	
317	3-962-959-01	GEAR (S-K), IDLER	
318	3-958-533-01	CLAW, S WINDING	
319	3-958-532-01	ARM, S WINDING	
320	3-958-534-01	SPRING, TORSION	
321	3-966-092-01	RING, RETAINING, SLIT WASHER	
322	X-3943-886-1	TG1 ASSY	
323	3-958-492-01	SPRING (TG1), TENSION COIL	
324	A-6750-325-A	T BLOCK ASSY, SHUTTLE	
325	X-3944-378-1	ROLLER ASSY, GUIDE	
326	A-6750-316-A	SHUTTLE (S) BLOCK ASSY	
327	3-958-504-01	ARM, FIXED RELEASE	
329	3-965-178-01	SPRING	
M902	1-698-409-14	MOTOR, DC (CAPSTAN)	

5-2. ELECTRICAL PARTS LIST

NOTE:

When indicating parts by reference number, please include the board naame.

The components identified by mark ⚠ or dotted line with mark ⚠ are critical for safety. Replace only with part number specified.

- Due to standardization, replacements in the parts list may be different from the parts specified in the diagrams or the components used on the set.
- -XX, -X mean standardized parts, so they may have some difference from the original one.
- Items marked "*" are not stocked since they are seldom required for routine service. Some delay should be anticipated when ordering these items.
- CAPACITORS:
  uF: µF
- RESISTORS
  All resistors are in ohms.
  METAL: metal-film resistor
  METAL OXIDE: Metal Oxide-film resistor
  F: nonflammable
- COILS
  uH: µH
- SEMICONDUCTORS
  In each case, u: µ, for example:
  uA...: µA... , uPA... , µPA... , uPB... , µPB... , uPC... , µPC... , uPD..., µPD...

Ref. No.	Part No.	Description			Remarks
*	1-664-684-15	DS-76 BOARD (Ref.No.:1,000 Series) **********			
		< CONNECTOR >			
CN442	1-774-471-41	CONNECTOR, FFC/FPC 5P (E320)			
		< JUMPER RESISTOR >			
JR701	1-216-295-00	METAL CHIP	0	5%	1/10W
JR703	1-216-296-00	METAL CHIP	0	5%	1/8W (E170,E470)
JR706	1-216-296-00	METAL CHIP	0	5%	1/8W
JR707	1-216-295-00	METAL CHIP	0	5%	1/10W (E320)
		< RESISTOR >			
R451	1-216-053-00	METAL CHIP	1.5K	5%	1/10W
R452	1-216-053-00	METAL CHIP	1.5K	5%	1/10W
		< SWITCH >			
S441	1-571-977-11	SWITCH, TACTIL (FF)(E170,E470)			
S442	1-571-977-11	SWITCH, TACTIL (PLAY)(E170,E470)			
S443	1-571-977-11	SWITCH, TACTIL (STOP)(E170,E470)			
S444	1-571-977-11	SWITCH, TACTIL (REW(E170,E470)			
S446	1-571-977-11	SWITCH, TACTIL (FF)(E320)			
S447	1-571-977-11	SWITCH, TACTIL (REW)(E320)			
*	A-6791-231-A	MA-293G BOARD,COMPLETE (E170EG) **********			
*	A-6791-232-A	MA-293H BOARD,COMPLETE (E320EE) **********			
*	A-6791-233-A	MA-293I BOARD,COMPLETE (E470EG) **********			
*	A-6791-275-A	MA-293K BOARD,COMPLETE (E470EE) **********			
*	A-6791-276-A	MA-293J BOARD,COMPLETE (E170EE) ********** (Ref.No.:1,000 Series)			
*	3-960-273-01	SPACER, TOP END			
*	3-960-274-01	SPACER, LED			
*	3-972-505-12	CASE, MAIN, RP SHIELD			

Ref. No.	Part No.	Description			Remarks
		< CAPACITOR >			
C102	1-163-251-11	CERAMIC CHIP	100PF	5%	50V
C103	1-163-251-11	CERAMIC CHIP	100PF	5%	50V
C104	1-126-157-11	ELECT	10uF	20%	16V
C111	1-164-232-11	CERAMIC CHIP	0.01uF		50V
C112	1-164-232-11	CERAMIC CHIP	0.01uF		50V
C113	1-164-232-11	CERAMIC CHIP	0.01uF		50V
C114	1-164-232-11	CERAMIC CHIP	0.01uF		50V
C115	1-163-038-91	CERAMIC CHIP	0.1uF		25V
C118	1-124-589-11	ELECT	47uF	20%	16V
C119	1-124-589-11	ELECT	47uF	20%	16V
C120	1-164-232-11	CERAMIC CHIP	0.01uF		50V
C131	1-164-232-11	CERAMIC CHIP	0.01uF		50V
C132	1-124-589-11	ELECT	47uF	20%	16V
C134	1-164-232-11	CERAMIC CHIP	0.01uF		50V
C140	1-164-161-11	CERAMIC CHIP	0.0022uF	10%	100V
C141	1-128-131-11	ELECT	22uF	20%	50V
C142	1-128-131-11	ELECT	22uF	20%	50V
C144	1-163-037-11	CERAMIC CHIP	0.022uF	10%	25V
C146	1-128-131-11	ELECT	22uF	20%	50V
C147	1-124-584-00	ELECT	100uF	20%	10V
C148	1-163-038-91	CERAMIC CHIP	0.1uF		25V
C160	1-163-038-91	CERAMIC CHIP	0.1uF		25V
C161	1-124-584-00	ELECT	100uF	20%	10V
C162	1-104-905-11	CAPACITOR	0.22F		5.5V
C163	1-163-227-11	CERAMIC CHIP	10PF	0.5PF	50V
C164	1-163-227-11	CERAMIC CHIP	10PF	0.5PF	50V
C165	1-163-099-00	CERAMIC CHIP	18PF	5%	50V
C166	1-163-099-00	CERAMIC CHIP	18PF	5%	50V
C167	1-163-259-91	CERAMIC CHIP	220PF	5%	50V
C168	1-126-157-11	ELECT	10uF	20%	16V
C170	1-128-131-11	ELECT	22uF	20%	50V
C171	1-163-009-11	CERAMIC CHIP	1000PF	10%	50V
C172	1-163-259-91	CERAMIC CHIP	220PF	5%	50V
C201	1-126-160-11	ELECT	1uF	20%	50V
C202	1-163-809-11	CERAMIC CHIP	0.047uF	10%	25V
C204	1-164-232-11	CERAMIC CHIP	0.01uF		50V
C205	1-163-037-11	CERAMIC CHIP	0.022uF	10%	25V
C206	1-164-232-11	CERAMIC CHIP	0.01uF		50V
C207	1-164-232-11	CERAMIC CHIP	0.01uF		50V
C208	1-163-241-11	CERAMIC CHIP	39PF	5%	50V
C209	1-128-131-11	ELECT	22uF	20%	50V
C210	1-163-131-00	CERAMIC CHIP	390PF	5%	50V
C211	1-163-239-11	CERAMIC CHIP	33PF	5%	50V
C212	1-163-227-11	CERAMIC CHIP	10PF	0.5PF	50V
C213	1-163-259-91	CERAMIC CHIP	220PF	5%	50V

MA-293

Ref. No.	Part No.	Description			Remarks
C217	1-126-160-11	ELECT	1uF	20%	50V
C218	1-163-241-11	CERAMIC CHIP	39PF	5%	50V (E170EG,E470EG)
C219	1-163-038-91	CERAMIC CHIP	0.1uF		25V
C220	1-126-160-11	ELECT	1uF	20%	50V
C223	1-124-589-11	ELECT	47uF	20%	16V
C224	1-163-038-91	CERAMIC CHIP	0.1uF		25V
C225	1-163-241-11	CERAMIC CHIP	39PF	5%	50V (E170EG,E470EG)
C226	1-163-038-91	CERAMIC CHIP	0.1uF		25V
C228	1-124-261-00	ELECT	10uF	20%	50V
C229	1-163-038-91	CERAMIC CHIP	0.1uF		25V
C230	1-124-589-11	ELECT	47uF	20%	16V
C231	1-124-261-00	ELECT	10uF	20%	50V
C232	1-126-160-11	ELECT	1uF	20%	50V
C233	1-126-160-11	ELECT	1uF	20%	50V
C234	1-164-232-11	CERAMIC CHIP	0.01uF		50V
C235	1-164-232-11	CERAMIC CHIP	0.01uF		50V
C236	1-126-160-11	ELECT	1uF	20%	50V
C237	1-164-232-11	CERAMIC CHIP	0.01uF		50V
C238	1-163-038-91	CERAMIC CHIP	0.1uF		25V
C239	1-124-589-11	ELECT	47uF	20%	16V
C240	1-126-160-11	ELECT	1uF	20%	50V
C241	1-163-037-11	CERAMIC CHIP	0.022uF	10%	25V
C242	1-126-160-11	ELECT	1uF	20%	50V
C243	1-164-232-11	CERAMIC CHIP	0.01uF		50V
C244	1-163-038-91	CERAMIC CHIP	0.1uF		25V
C245	1-163-809-11	CERAMIC CHIP	0.047uF	10%	25V
C246	1-126-160-11	ELECT	1uF	20%	50V
C247	1-163-809-11	CERAMIC CHIP	0.047uF	10%	25V
C248	1-164-232-11	CERAMIC CHIP	0.01uF		50V
C249	1-124-589-11	ELECT	47uF	20%	16V
C250	1-163-038-91	CERAMIC CHIP	0.1uF		25V
C251	1-163-038-91	CERAMIC CHIP	0.1uF		25V
C252	1-164-232-11	CERAMIC CHIP	0.01uF		50V
C253	1-163-038-91	CERAMIC CHIP	0.1uF		25V
C254	1-163-038-91	CERAMIC CHIP	0.1uF		25V
C255	1-163-038-91	CERAMIC CHIP	0.1uF		25V
C256	1-163-038-91	CERAMIC CHIP	0.1uF		25V
C260	1-163-235-11	CERAMIC CHIP	22PF	5%	50V
C261	1-163-235-11	CERAMIC CHIP	22PF	5%	50V (E470)
C264	1-163-037-11	CERAMIC CHIP	0.022uF	10%	25V
C265	1-163-037-11	CERAMIC CHIP	0.022uF	10%	25V (E470)
C266	1-164-232-11	CERAMIC CHIP	0.01uF		50V
C267	1-163-037-11	CERAMIC CHIP	0.022uF	10%	25V
C268	1-163-241-11	CERAMIC CHIP	39PF	5%	50V
C269	1-163-241-11	CERAMIC CHIP	39PF	5%	50V
C270	1-163-037-11	CERAMIC CHIP	0.022uF	10%	25V
C271	1-163-037-11	CERAMIC CHIP	0.022uF	10%	25V
C272	1-164-232-11	CERAMIC CHIP	0.01uF		50V (E170,E320)
C272	1-163-241-11	CERAMIC CHIP	39PF	5%	50V (E470)
C273	1-216-025-91	METAL GLAZE	100	5%	1/10W (E170,E320)
C273	1-163-241-11	CERAMIC CHIP	39PF	5%	50V (E470)
C274	1-163-037-11	CERAMIC CHIP	0.022uF	10%	25V (E470)
C276	1-163-037-11	CERAMIC CHIP	0.022uF	10%	25V
C277	1-163-037-11	CERAMIC CHIP	0.022uF	10%	25V
C278	1-163-037-11	CERAMIC CHIP	0.022uF	10%	25V (E470)
C279	1-163-037-11	CERAMIC CHIP	0.022uF	10%	25V (E470)
C280	1-124-584-00	ELECT	100uF	20%	10V
C281	1-163-038-91	CERAMIC CHIP	0.1uF		25V
C282	1-164-232-11	CERAMIC CHIP	0.01uF		50V
C283	1-163-038-91	CERAMIC CHIP	0.1uF		25V
C284	1-163-038-91	CERAMIC CHIP	0.1uF		25V
C286	1-124-584-00	ELECT	100uF	20%	10V
C287	1-163-227-11	CERAMIC CHIP	10PF	0.5PF	50V
C288	1-163-227-11	CERAMIC CHIP	10PF	0.5PF	50V
C289	1-163-038-91	CERAMIC CHIP	0.1uF		25V
C301	1-163-038-91	CERAMIC CHIP	0.1uF		25V
C302	1-124-589-11	ELECT	47uF	20%	16V
C303	1-126-160-11	ELECT	1uF	20%	50V
C305	1-126-160-11	ELECT	1uF	20%	50V
C306	1-126-160-11	ELECT	1uF	20%	50V
C307	1-124-261-00	ELECT	10uF	20%	50V
C308	1-126-967-11	ELECT	47uF	20%	16V
C309	1-126-963-11	ELECT	4.7uF	20%	50V
C310	1-163-011-11	CERAMIC CHIP	0.0015uF	10%	50V
C311	1-163-011-11	CERAMIC CHIP	0.0015uF	10%	50V
C312	1-137-370-11	FILM	0.01uF	5%	50V
C313	1-126-964-11	ELECT	10uF	20%	50V
C314	1-164-232-11	CERAMIC CHIP	0.01uF		50V
C315	1-126-160-11	ELECT	1uF	20%	50V
C317	1-126-963-11	ELECT	4.7uF	20%	50V
C318	1-126-964-11	ELECT	10uF	20%	50V
C321	1-124-589-11	ELECT	47uF	20%	16V
C322	1-164-232-11	CERAMIC CHIP	0.01uF		50V
C323	1-164-232-11	CERAMIC CHIP	0.01uF		50V
C324	1-104-697-11	FILM	0.047uF	5%	100V
C401	1-164-232-11	CERAMIC CHIP	0.01uF		50V
C402	1-164-232-11	CERAMIC CHIP	0.01uF		50V
C403	1-163-038-91	CERAMIC CHIP	0.1uF		25V
C404	1-163-809-11	CERAMIC CHIP	0.047uF	10%	25V
C405	1-164-232-11	CERAMIC CHIP	0.01uF		50V
C406	1-163-809-11	CERAMIC CHIP	0.047uF	10%	25V
C407	1-163-809-11	CERAMIC CHIP	0.047uF	10%	25V
C421	1-124-589-11	ELECT	47uF	20%	16V
C422	1-124-589-11	ELECT	47uF	20%	16V
C423	1-164-232-11	CERAMIC CHIP	0.01uF		50V
C424	1-163-038-91	CERAMIC CHIP	0.1uF		25V
C500	1-164-232-11	CERAMIC CHIP	0.01uF		50V
C501	1-124-589-11	ELECT	47uF	20%	16V
C502	1-163-245-11	CERAMIC CHIP	56PF	5%	50V
C503	1-126-160-11	ELECT	1uF	20%	50V
C504	1-163-253-11	CERAMIC CHIP	120PF	5%	50V
C506	1-130-481-00	MYLAR	0.0068uF	5%	50V
C507	1-124-499-11	ELECT, NONPOLAR	1uF	20%	50V
C508	1-130-487-00	MYLAR	0.022uF	5%	50V
C511	1-164-232-11	CERAMIC CHIP	0.01uF		50V
C512	1-124-589-11	ELECT	47uF	20%	16V
C513	1-163-235-11	CERAMIC CHIP	22PF	5%	50V

Ref. No.	Part No.	Description			Remarks
C514	1-163-099-00	CERAMIC CHIP	18PF	5%	50V
C517	1-164-232-11	CERAMIC CHIP	0.01uF		50V
C518	1-163-231-11	CERAMIC CHIP	15PF	5%	50V
C540	1-126-935-11	ELECT	470uF	20%	6.3V
C541	1-163-009-11	CERAMIC CHIP	0.001uF	10%	50V
C542	1-163-011-11	CERAMIC CHIP	0.0015uF	10%	50V (E170EG,E470EG)
C543	1-124-589-11	ELECT	47uF	20%	16V
C600	1-128-131-11	ELECT	22uF	20%	50V
C602	1-124-589-11	ELECT	47uF	20%	16V
C604	1-164-232-11	CERAMIC CHIP	0.01uF		50V
C605	1-124-589-11	ELECT	47uF	20%	16V
C606	1-128-131-11	ELECT	22uF	20%	50V
C608	1-124-589-11	ELECT	47uF	20%	16V
C700	1-126-964-11	ELECT	10uF	20%	50V
C701	1-126-965-11	ELECT	22uF	20%	50V
C702	1-126-967-11	ELECT	47uF	20%	16V
C703	1-164-232-11	CERAMIC CHIP	0.01uF		50V
C704	1-126-967-11	ELECT	47uF	20%	16V
C705	1-164-232-11	CERAMIC CHIP	0.01uF		50V
C706	1-126-963-11	ELECT	4.7uF	20%	50V
C707	1-164-232-11	CERAMIC CHIP	0.01uF		50V
C713	1-124-584-00	ELECT	100uF	20%	10V
C714	1-163-038-91	CERAMIC CHIP	0.1uF		25V
C717	1-124-584-00	ELECT	100uF	20%	10V
C718	1-164-232-11	CERAMIC CHIP	0.01uF		50V
C723	1-126-967-11	ELECT	47uF	20%	16V
		< CONNECTOR >			
CN101	1-506-470-11	PIN, CONNECTOR 5P			
* CN102	1-766-538-11	CONNECTOR, BOARD TO BOARD 8P			
* CN103	1-766-537-11	CONNECTOR (HMD) 5P			
* CN104	1-766-716-11	CONNECTOR, BOARD TO BOARD 3P			
CN140	1-506-468-11	PIN, CONNECTOR 3P			
CN260	1-563-585-11	CONNECTOR, FLEXIBLE 8P			
* CN261	1-560-893-00	PIN, CONNECTOR 5P			
CN301	1-506-469-11	PIN, CONNECTOR 4P			
CN302	1-506-468-11	PIN, CONNECTOR 3P			
CN401	1-506-469-11	PIN, CONNECTOR 4P (E170,E470)			
CN401	1-506-474-11	PIN, CONNECTOR 9P (E320)			
CN601	1-569-667-11	CONNECTOR, BOARD TO BOARD 8P			
		< JACK >			
* CNJ540	1-695-935-11	CONNECTOR (SQUARE TYPE) 21P (LINE TV) (E320,E470)			
CNJ541	1-779-010-11	JACK, PIN 4P (AUDIO/VIDEO)(E170)			
		< DIODE >			
D102	8-719-048-26	DIODE GL528V1			
D160	8-719-921-54	DIODE MTZJ-6.2B			
D161	8-719-200-82	DIODE 11ES2			
D162	8-719-200-82	DIODE 11ES2			
D301	8-719-911-19	DIODE 1SS119			
D302	8-719-911-19	DIODE 1SS119			
D401	8-719-054-09	DIODE MPG5304S			
D406	8-719-921-54	DIODE MTZJ-6.2B			
D506	8-719-911-19	DIODE 1SS119			
D540	8-719-921-54	DIODE MTZJ-6.2B (E320,E470)			

Ref. No.	Part No.	Description	Remarks
D541	8-719-921-54	DIODE MTZJ-6.2B (E320,E470)	
D542	8-719-921-54	DIODE MTZJ-6.2B (E320,E470)	
D543	8-719-921-54	DIODE MTZJ-6.2B (E320,E470)	
D544	8-719-921-54	DIODE MTZJ-6.2B	
D545	8-719-921-86	DIODE MTZJ-13 (E320,E470)	
D546	8-719-108-12	DIODE RD9.1E-W (E320,E470)	
D547	8-719-108-12	DIODE RD9.1E-W (E320,E470)	
D600	8-719-200-82	DIODE 11ES2	
D601	8-719-911-19	DIODE 1SS119	
D602	8-719-109-85	DIODE RD5.1ES-B2	
D603	8-719-911-19	DIODE 1SS119	
D701	8-719-982-26	DIODE MTZJ-33B	
		< FILTER >	
FL540	1-236-163-11	ENCAPSULATED COMPONENT	
FL541	1-236-163-11	ENCAPSULATED COMPONENT	
		< IC >	
IC131	8-759-353-59	IC LB1643	
IC160	8-759-474-04	IC M37777M7A216GP	
IC201	8-759-464-99	IC LA71512M	
IC202	8-759-439-50	IC LC89977M-TE-L	
IC260	8-759-357-84	IC HA118295NT (E170,E320)	
IC260	8-759-352-17	IC HA118195NT (E470)	
IC301	8-759-089-84	IC BA7755AF	
IC403	8-742-042-00	RECEIVER HIC SBX1986-51	
IC420	8-759-366-44	IC uPD16312GB-3B4	
IC461	8-759-248-87	IC MM1256XF-BE	
IC462	8-759-353-42	IC ST24C04FM6TR	
IC500	8-759-432-04	IC LC74790M-9199-TLM	
IC600	8-759-438-18	IC PQ12RD08	
		< JUMPER RESISTOR >	
JR100	1-216-295-91	CONDUCTOR, CHIP (2012)	
JR102	1-216-296-91	CONDUCTOR, CHIP (3216)	
JR103	1-216-296-91	CONDUCTOR, CHIP (3216)	
JR107	1-216-296-91	CONDUCTOR, CHIP (3216)	
JR109	1-216-296-91	CONDUCTOR, CHIP (3216)	
JR110	1-216-296-91	CONDUCTOR, CHIP (3216)	
JR115	1-216-296-91	CONDUCTOR, CHIP (3216)	
JR116	1-216-296-91	CONDUCTOR, CHIP (3216)	
JR118	1-216-296-91	CONDUCTOR, CHIP (3216)	
JR119	1-216-296-91	CONDUCTOR, CHIP (3216)	
JR120	1-216-296-91	CONDUCTOR, CHIP (3216)	
JR121	1-216-295-91	CONDUCTOR, CHIP (2012)	
JR127	1-216-296-91	CONDUCTOR, CHIP (3216)	
JR130	1-216-296-91	CONDUCTOR, CHIP (3216)	
JR131	1-216-296-91	CONDUCTOR, CHIP (3216)	
JR133	1-216-296-91	CONDUCTOR, CHIP (3216)	
JR220	1-216-296-91	CONDUCTOR, CHIP (3216)	
JR250	1-216-296-91	CONDUCTOR, CHIP (3216)	
JR251	1-216-296-91	CONDUCTOR, CHIP (3216)	
JR260	1-216-295-91	CONDUCTOR, CHIP (2012)	
JR303	1-216-295-91	CONDUCTOR, CHIP (2012)	
JR305	1-216-296-91	CONDUCTOR, CHIP (3216)	
JR306	1-216-295-91	CONDUCTOR, CHIP (2012)	
JR308	1-216-296-91	CONDUCTOR, CHIP (3216)	
JR309	1-216-296-91	CONDUCTOR, CHIP (3216)	

Ref. No.	Part No.	Description				Remarks
JR310	1-216-296-91	CONDUCTOR, CHIP	(3216)			
JR311	1-216-296-91	CONDUCTOR, CHIP	(3216)			
JR312	1-216-296-91	CONDUCTOR, CHIP	(3216)			
JR313	1-216-295-91	CONDUCTOR, CHIP	(2012)			
JR315	1-216-295-91	CONDUCTOR, CHIP	(2012)			
JR319	1-216-296-91	CONDUCTOR, CHIP	(3216)			
JR340	1-216-296-91	CONDUCTOR, CHIP	(3216)			
JR356	1-216-296-91	CONDUCTOR, CHIP	(3216)			
JR501	1-216-296-91	CONDUCTOR, CHIP	(3216)			
JR502	1-216-296-91	CONDUCTOR, CHIP	(3216)			
JR504	1-216-295-91	CONDUCTOR, CHIP	(2012)			
JR506	1-216-296-91	CONDUCTOR, CHIP	(3216)			
JR508	1-216-296-91	CONDUCTOR, CHIP	(3216)			
JR509	1-216-296-91	CONDUCTOR, CHIP	(3216)			
JR510	1-216-295-91	CONDUCTOR, CHIP	(2012)			
JR511	1-216-296-91	CONDUCTOR, CHIP	(3216)			
JR512	1-216-296-91	CONDUCTOR, CHIP	(3216)			
JR523	1-216-295-91	CONDUCTOR, CHIP	(2012)			
JR526	1-216-295-91	CONDUCTOR, CHIP	(2012)			
JR527	1-216-295-91	CONDUCTOR, CHIP	(2012)			
JR914	1-216-295-91	CONDUCTOR, CHIP	(2012)			
		< JUMPER RESISTOR >				
JS141	1-216-097-91	METAL GLAZE	100K	5%	1/10W	
JS220	1-216-295-91	CONDUCTOR, CHIP	(2012)			
JS402	1-216-295-91	CONDUCTOR, CHIP	(2012)			
JS545	1-216-296-91	CONDUCTOR, CHIP	(3216) (E320,E470)			
JS546	1-216-296-91	CONDUCTOR, CHIP	(3216) (E320,E470)			
JS701	1-216-295-91	CONDUCTOR, CHIP	(2012)			
		< COIL >				
L130	1-403-588-11	COIL, CHOKE	22uH			
L140	1-410-513-11	INDUCTOR	22uH			
L161	1-410-513-11	INDUCTOR	22uH			
L162	1-410-513-11	INDUCTOR	22uH			
L163	1-410-513-11	INDUCTOR	22uH			
L164	1-410-519-11	INDUCTOR	68uH			
L201	1-410-516-11	INDUCTOR	39uH			
L202	1-410-521-11	INDUCTOR	100uH			
L203	1-410-516-11	INDUCTOR	39uH			
L204	1-410-509-11	INDUCTOR	10uH			
L205	1-410-513-11	INDUCTOR	22uH			
L206	1-410-509-11	INDUCTOR	10uH			
L262	1-408-982-11	INDUCTOR	100uH			
L263	1-408-982-11	INDUCTOR	100uH			
L301	1-410-521-11	INDUCTOR	100uH			
L321	1-408-982-11	INDUCTOR	100uH			
L440	1-410-513-11	INDUCTOR	22uH			
L500	1-408-982-11	INDUCTOR	100uH			
L501	1-408-982-11	INDUCTOR	100uH			
L503	1-408-974-21	INDUCTOR	22uH			
L540	1-410-513-11	INDUCTOR	22uH			
L600	1-410-519-11	INDUCTOR	68uH			
L601	1-408-970-21	INDUCTOR	10uH			
L700	1-408-970-21	INDUCTOR	10uH			
L701	1-408-970-21	INDUCTOR	10uH			
L703	1-408-970-21	INDUCTOR	10uH			

Ref. No.	Part No.	Description				Remarks
		< FLUORECENT INDICATOR >				
ND420	1-517-596-11	TUBE, FLUORESCENT INDICATOR				
		< PHOTO INTERUPTER >				
PH100	8-749-010-20	PHOTO INTERRUPTER GP3S114				
PH101	8-749-010-19	PHOTO INTERRUPTER GP3S113				
		< IC LINK >				
⚠PS403	1-533-586-31	LINK, IC				
⚠PS600	1-532-841-21	LINK, IC				
		< TRANSISTOR >				
Q100	8-729-025-92	PHOTO TRANSISTOR PT380F				
Q101	8-729-025-92	PHOTO TRANSISTOR PT380F				
Q102	8-729-281-53	TRANSISTOR	2SC1815-GR			
Q201	8-729-230-49	TRANSISTOR	2SC2712-YG			
Q202	8-729-230-49	TRANSISTOR	2SC2712-YG			
Q208	8-729-230-49	TRANSISTOR	2SC2712-YG			
Q209	8-729-010-05	TRANSISTOR	MSB709-RT1			
Q210	8-729-230-49	TRANSISTOR	2SC2712-YG			
Q211	8-729-230-49	TRANSISTOR	2SC2712-YG			
Q260	8-729-230-49	TRANSISTOR	2SC2712-YG			
Q301	8-729-281-53	TRANSISTOR	2SC1815-GR			
Q302	8-729-424-67	TRANSISTOR	UN2216			
Q321	8-729-802-91	TRANSISTOR	2SD879			
Q500	8-729-010-05	TRANSISTOR	MSB709-RT1			
Q501	8-729-010-05	TRANSISTOR	MSB709-RT1			
Q540	8-729-010-05	TRANSISTOR	MSB709-RT1			
Q541	8-729-424-08	TRANSISTOR	UN2111 (E320,E470)			
Q542	8-729-421-19	TRANSISTOR	UN2213 (E320,E470)			
Q600	8-729-140-93	TRANSISTOR	2SB733-34			
Q601	8-729-422-27	TRANSISTOR	2SD601A-Q			
Q602	8-729-019-01	TRANSISTOR	2SD2394-EF			
Q604	8-729-281-53	TRANSISTOR	2SC1815-GR			
Q702	8-729-010-25	TRANSISTOR	MSD601-RT1			
Q718	8-729-106-68	TRANSISTOR	2SD1615A-GP			
		< RESISTOR >				
R100	1-216-081-00	METAL CHIP	22K	5%	1/10W	
R101	1-216-033-00	METAL CHIP	220	5%	1/10W	
R102	1-216-033-00	METAL CHIP	220	5%	1/10W	
R103	1-216-081-00	METAL CHIP	22K	5%	1/10W	
R104	1-216-117-00	METAL CHIP	680K	5%	1/10W	
R105	1-216-119-00	METAL CHIP	820K	5%	1/10W	
R106	1-216-057-00	METAL CHIP	2.2K	5%	1/10W	
R107	1-216-049-91	METAL GLAZE	1K	5%	1/10W	
R108	1-247-807-31	CARBON	100	5%	1/4W	
R109	1-247-807-31	CARBON	100	5%	1/4W	
R111	1-216-089-91	METAL GLAZE	47K	5%	1/10W	
R112	1-216-089-91	METAL GLAZE	47K	5%	1/10W	
R113	1-216-089-91	METAL GLAZE	47K	5%	1/10W	
R114	1-216-089-91	METAL GLAZE	47K	5%	1/10W	
R115	1-216-089-91	METAL GLAZE	47K	5%	1/10W	
R117	1-216-041-00	METAL CHIP	470	5%	1/10W	
R124	1-216-041-00	METAL CHIP	470	5%	1/10W	
R125	1-216-041-00	METAL CHIP	470	5%	1/10W	
R130	1-216-041-00	METAL CHIP	470	5%	1/10W	
R131	1-216-041-00	METAL CHIP	470	5%	1/10W	

Note : The components identified by mark ⚠ or dotted line with mark ⚠ are critical for safety. Replace only with part number specified.

Ref. No.	Part No.	Description			Remarks
R132	1-216-089-91	METAL GLAZE	47K	5%	1/10W
R133	1-216-081-00	METAL CHIP	22K	5%	1/10W
R140	1-216-065-00	METAL CHIP	4.7K	5%	1/10W
R160	1-216-295-91	CONDUCTOR, CHIP	(2012)		
R161	1-216-049-91	METAL GLAZE	1K	5%	1/10W (E470)
R162	1-216-049-91	METAL GLAZE	1K	5%	1/10W (E170)
R164	1-216-121-91	METAL GLAZE	1M	5%	1/10W
R165	1-216-039-00	METAL CHIP	390	5%	1/10W
R166	1-216-041-00	METAL CHIP	470	5%	1/10W
R167	1-216-295-91	CONDUCTOR, CHIP	(2012)		
R168	1-216-295-91	CONDUCTOR, CHIP	(2012)		
R170	1-216-049-91	METAL GLAZE	1K	5%	1/10W
R172	1-216-295-91	CONDUCTOR, CHIP	(2012)		
R173	1-216-295-91	CONDUCTOR, CHIP	(2012)		
R174	1-216-295-91	CONDUCTOR, CHIP	(2012)		
R175	1-216-051-00	METAL CHIP	1.2K	5%	1/10W
R176	1-218-179-11	METAL GLAZE	10M	5%	1/10W
R181	1-216-073-00	METAL CHIP	10K	5%	1/10W
R182	1-216-049-91	METAL GLAZE	1K	5%	1/10W
R201	1-216-041-00	METAL CHIP	470	5%	1/10W
R202	1-216-067-00	METAL CHIP	5.6K	5%	1/10W (E170,E320)
R202	1-216-069-00	METAL CHIP	6.8K	5%	1/10W (E470)
R203	1-216-049-91	METAL GLAZE	1K	5%	1/10W
R204	1-216-047-91	METAL GLAZE	820	5%	1/10W
R205	1-216-037-00	METAL CHIP	330	5%	1/10W
R206	1-216-037-00	METAL CHIP	330	5%	1/10W
R207	1-216-073-00	METAL CHIP	10K	5%	1/10W
R208	1-216-061-00	METAL CHIP	3.3K	5%	1/10W (E170,E320)
R208	1-216-069-00	METAL CHIP	6.8K	5%	1/10W (E470)
R209	1-216-295-91	CONDUCTOR, CHIP	(2012)		
R214	1-216-039-00	METAL CHIP	390	5%	1/10W
R218	1-208-798-11	METAL GLAZE	4.7K	0.50%	1/10W
R219	1-216-053-00	METAL CHIP	1.5K	5%	1/10W
R220	1-216-295-91	CONDUCTOR, CHIP	(2012)		
R222	1-216-051-00	METAL CHIP	1.2K	5%	1/10W
R223	1-216-017-91	METAL GLAZE	47	5%	1/10W (E170EG,E470EG)
R223	1-216-295-91	CONDUCTOR, CHIP	(2012)		(E170EE.E320EE,E470EE)
R225	1-216-017-91	METAL GLAZE	47	5%	1/10W (E170EG,E470EG)
R225	1-216-295-91	CONDUCTOR, CHIP	(2012)		(E170EE.E320EE,E470EE)
R226	1-216-025-91	METAL GLAZE	100	5%	1/10W
R227	1-216-295-91	CONDUCTOR, CHIP	(2012)		
R228	1-216-057-00	METAL CHIP	2.2K	5%	1/10W
R229	1-216-055-00	METAL CHIP	1.8K	5%	1/10W
R230	1-216-045-00	METAL CHIP	680	5%	1/10W
R231	1-216-071-00	METAL CHIP	8.2K	5%	1/10W
R233	1-216-055-00	METAL CHIP	1.8K	5%	1/10W
R234	1-216-049-91	METAL GLAZE	1K	5%	1/10W
R235	1-216-073-00	METAL CHIP	10K	5%	1/10W
R236	1-216-049-91	METAL GLAZE	1K	5%	1/10W

Ref. No.	Part No.	Description			Remarks
R237	1-216-057-00	METAL CHIP	2.2K	5%	1/10W
R238	1-216-057-00	METAL CHIP	2.2K	5%	1/10W
R239	1-216-057-00	METAL CHIP	2.2K	5%	1/10W
R240	1-216-049-91	METAL GLAZE	1K	5%	1/10W
R243	1-216-061-00	METAL CHIP	3.3K	5%	1/10W
R244	1-216-089-91	METAL GLAZE	47K	5%	1/10W
R246	1-216-121-91	METAL GLAZE	1M	5%	1/10W
R260	1-216-045-00	METAL CHIP	680	5%	1/10W
R261	1-216-045-00	METAL CHIP	680	5%	1/10W (E470)
R262	1-216-295-91	CONDUCTOR, CHIP	(2012)		
R263	1-216-295-91	CONDUCTOR, CHIP	(2012)		
R264	1-216-295-91	CONDUCTOR, CHIP	(2012)		
R265	1-216-295-91	CONDUCTOR, CHIP	(2012)		
R266	1-216-051-00	METAL CHIP	1.2K	5%	1/10W (E170,E320)
R266	1-216-055-00	METAL CHIP	1.8K	5%	1/10W (E470)
R267	1-216-073-00	METAL CHIP	10K	5%	1/10W
R268	1-216-081-00	METAL CHIP	22K	5%	1/10W
R269	1-216-061-00	METAL CHIP	3.3K	5%	1/10W
R270	1-216-081-00	METAL CHIP	22K	5%	1/10W
R271	1-216-049-91	METAL GLAZE	1K	5%	1/10W
R272	1-216-077-00	METAL CHIP	15K	5%	1/10W
R273	1-216-077-00	METAL CHIP	15K	5%	1/10W
R274	1-216-073-00	METAL CHIP	10K	5%	1/10W
R275	1-216-073-00	METAL CHIP	10K	5%	1/10W
R276	1-216-049-91	METAL GLAZE	1K	5%	1/10W
R278	1-216-025-91	METAL GLAZE	100	5%	1/10W (E170,E320)
R301	1-216-091-00	METAL CHIP	56K	5%	1/10W
R302	1-216-067-00	METAL CHIP	5.6K	5%	1/10W
R303	1-216-093-00	METAL CHIP	68K	5%	1/10W
R305	1-216-067-00	METAL CHIP	5.6K	5%	1/10W
R306	1-216-073-00	METAL CHIP	10K	5%	1/10W
R307	1-216-061-00	METAL CHIP	3.3K	5%	1/10W
R309	1-216-065-00	METAL CHIP	4.7K	5%	1/10W
R310	1-216-129-00	METAL CHIP	2.2M	5%	1/10W
R311	1-216-051-00	METAL CHIP	1.2K	5%	1/10W
R312	1-216-079-00	METAL CHIP	18K	5%	1/10W
R313	1-216-109-00	METAL CHIP	330K	5%	1/10W
R314	1-216-035-00	METAL CHIP	270	5%	1/10W
R315	1-216-069-00	METAL CHIP	6.8K	5%	1/10W
R316	1-216-073-00	METAL CHIP	10K	5%	1/10W
R317	1-216-079-00	METAL CHIP	18K	5%	1/10W
R318	1-216-075-00	METAL CHIP	12K	5%	1/10W
R319	1-216-043-91	METAL GLAZE	560	5%	1/10W
R320	1-216-047-91	METAL GLAZE	820	5%	1/10W
R321	1-216-017-91	METAL GLAZE	47	5%	1/10W
R322	1-216-063-91	METAL GLAZE	3.9K	5%	1/10W
R323	1-217-671-11	METAL CHIP	1	5%	1/10W
R324	1-216-031-00	METAL CHIP	180	5%	1/10W
R401	1-249-407-11	CARBON	150	5%	1/4W F
R403	1-216-113-00	METAL CHIP	470K	5%	1/10W
R404	1-216-105-91	METAL GLAZE	220K	5%	1/10W
R405	1-216-061-00	METAL CHIP	3.3K	5%	1/10W
R406	1-216-061-00	METAL CHIP	3.3K	5%	1/10W
R407	1-216-073-00	METAL CHIP	10K	5%	1/10W
R408	1-216-073-00	METAL CHIP	10K	5%	1/10W
R409	1-216-013-00	METAL CHIP	33	5%	1/10W

Ref. No.	Part No.	Description			Remarks
R410	1-216-073-00	METAL CHIP	10K	5%	1/10W
R411	1-216-013-00	METAL CHIP	33	5%	1/10W
R412	1-216-089-91	METAL GLAZE	47K	5%	1/10W
R413	1-216-089-91	METAL GLAZE	47K	5%	1/10W
R414	1-216-053-00	METAL CHIP	1.5K	5%	1/10W
R415	1-216-053-00	METAL CHIP	1.5K	5%	1/10W
R417	1-216-057-00	METAL CHIP	2.2K	5%	1/10W
R418	1-216-057-00	METAL CHIP	2.2K	5%	1/10W
R419	1-216-059-00	METAL CHIP	2.7K	5%	1/10W
R420	1-216-059-00	METAL CHIP	2.7K	5%	1/10W
R421	1-216-295-91	CONDUCTOR, CHIP	(2012)		
R422	1-216-049-91	METAL GLAZE	1K	5%	1/10W
R423	1-216-049-91	METAL GLAZE	1K	5%	1/10W
R424	1-216-049-91	METAL GLAZE	1K	5%	1/10W
R425	1-216-085-00	METAL CHIP	33K	5%	1/10W
R426	1-216-065-00	METAL CHIP	4.7K	5%	1/10W
R440	1-216-065-00	METAL CHIP	4.7K	5%	1/10W
R441	1-216-069-00	METAL CHIP	6.8K	5%	1/10W
R442	1-216-077-00	METAL CHIP	15K	5%	1/10W
R443	1-216-689-11	METAL CHIP	39K	0.5%	1/10W
R445	1-216-075-00	METAL CHIP	12K	5%	1/10W
R448	1-216-089-91	METAL GLAZE	47K	5%	1/10W
R449	1-216-089-91	METAL GLAZE	47K	5%	1/10W
R500	1-216-041-00	METAL CHIP	470	5%	1/10W
R501	1-216-057-00	METAL CHIP	2.2K	5%	1/10W
R502	1-216-057-00	METAL CHIP	2.2K	5%	1/10W
R504	1-216-049-91	METAL GLAZE	1K	5%	1/10W
R505	1-216-053-00	METAL CHIP	1.5K	5%	1/10W
R506	1-216-069-00	METAL CHIP	6.8K	5%	1/10W
R507	1-216-295-91	CONDUCTOR, CHIP	(2012)		
R508	1-216-049-91	METAL GLAZE	1K	5%	1/10W
R509	1-216-041-00	METAL CHIP	470	5%	1/10W
R510	1-216-041-00	METAL CHIP	470	5%	1/10W
R540	1-216-022-00	METAL CHIP	75	5%	1/10W
R541	1-216-021-00	METAL CHIP	68	5%	1/10W
R542	1-216-041-00	METAL CHIP	470	5%	1/10W (E320,E470)
R543	1-216-295-91	CONDUCTOR, CHIP	(2012)		(E170)
R543	1-216-041-00	METAL CHIP	470	5%	1/10W (E320,E470)
R544	1-216-043-91	METAL GLAZE	560	5%	1/10W (E170)
R544	1-216-037-00	METAL CHIP	330	5%	1/10W (E320,E470)
R545	1-249-407-11	CARBON	150	5%	1/4W F
R546	1-249-407-11	CARBON	150	5%	1/4W F
R547	1-216-033-00	METAL CHIP	220	5%	1/10W
R549	1-216-049-91	METAL GLAZE	1K	5%	1/10W (E320,E470)
R550	1-216-065-00	METAL CHIP	4.7K	5%	1/10W (E320,E470)
R600	1-249-417-11	CARBON	1K	5%	1/4W F
R601	1-216-430-11	METAL OXIDE	390	5%	1W F
R602	1-216-065-00	METAL CHIP	4.7K	5%	1/10W
R603	1-216-065-00	METAL CHIP	4.7K	5%	1/10W
R604	1-249-417-11	CARBON	1K	5%	1/4W F
R605	1-215-857-11	METAL OXIDE	10	5%	1W F
R606	1-215-908-00	METAL OXIDE	33	5%	3W F
R608	1-247-815-91	CARBON	220	5%	1/4W
R609	1-249-417-11	CARBON	1K	5%	1/4W F
R610	1-247-815-91	CARBON	220	5%	1/4W
R700	1-216-025-91	METAL GLAZE	100	5%	1/10W
R701	1-216-025-91	METAL GLAZE	100	5%	1/10W
R702	1-216-049-91	METAL GLAZE	1K	5%	1/10W
R703	1-216-049-91	METAL GLAZE	1K	5%	1/10W
R704	1-216-049-91	METAL GLAZE	1K	5%	1/10W
R705	1-216-049-91	METAL GLAZE	1K	5%	1/10W
R706	1-216-025-91	METAL GLAZE	100	5%	1/10W
R707	1-216-049-91	METAL GLAZE	1K	5%	1/10W
R709	1-216-295-91	CONDUCTOR, CHIP	(2012)		
R711	1-216-081-00	METAL CHIP	22K	5%	1/10W
R716	1-216-025-91	METAL GLAZE	100	5%	1/10W
R717	1-216-295-91	CONDUCTOR, CHIP	(2012)		
R719	1-216-041-00	METAL CHIP	470	5%	1/10W
R721	1-216-113-00	METAL CHIP	470K	5%	1/10W
R729	1-216-025-91	METAL GLAZE	100	5%	1/10W
⚠R732	1-212-893-00	FUSIBLE	330	5%	1/4W F
		< SWITCH >			
S100	1-570-953-11	SWITCH, PUSH (1 KEY)(REC PROOF)			
S401	1-571-532-32	SWITCH, TACTIL (POWER)			
S402	1-571-532-32	SWITCH, TACTIL (EJECT)			
S403	1-571-532-32	SWITCH, TACTIL (REC)			
S404	1-571-532-32	SWITCH, TACTIL (PAUSE)			
S405	1-571-532-32	SWITCH, TACTIL (CH+)			
S406	1-571-532-32	SWITCH, TACTIL (CH-)			
S407	1-571-532-32	SWITCH, TACTIL (RF CHANNEL)			
S410	1-572-907-11	SWITCH, SLIDE (COLOR SYSTEM)			
S412	1-571-588-11	SWITCH, SLIDE (NTSC PB)			
		< TRANSFORMER >			
T321	1-431-097-11	TRANSFORMER, BIAS OSCILLATION			
T500	1-233-527-11	FILTER, TRAP			
		< TUNER >			
TU701	1-693-360-21	TUNER, MOD/IF SOLID TYPE (E170EG,E470EG)			
TU701	1-693-359-21	TUNER, MOD/IF SOLID TYPE (E170EE.E320EE,E470EE)			
		< VIBRATOR >			
X160	1-760-494-11	VIBRATOR, CRYSTAL 16MHz			
X161	1-579-463-11	VIBRATOR, CRYSTAL 32.768MHz			
X201	1-579-608-11	VIBRATOR, CRYSTAL 4.43MHz			
X500	1-577-289-11	VIBRATOR, CRYSTAL 17.734475MHz			
⚠	1-468-188-11	POWER BLOCK SR707 **********			
		(Ref.No.:5,000 Series)			
		< CAPACITOR >			
C108	9-980-236-01	ELECT	47uF	400V	
C109	1-128-578-11	ELECT	1uF	100V	
C202	1-126-967-11	ELECT	47uF	50V	
C203	1-126-183-11	ELECT	1000uF	16V	
C204	1-126-935-11	ELECT	470uF	16V	

Note : The components identified by mark ⚠ or dotted line with mark ⚠ are critical for safety. Replace only with part number specified.

Ref. No.	Part No.	Description		Remarks
C205	1-126-797-11	ELECT	1000uF	10V
C206	1-126-935-11	ELECT	470uF	16V
C207	1-126-933-11	ELECT	100uF	16V
C208	1-126-960-11	ELECT	1uF	50V
		< DIODE >		
D101	8-719-047-70	DIODE 1A4		
D102	8-719-047-70	DIODE 1A4		
D103	8-719-047-70	DIODE 1A4		
D104	8-719-047-70	DIODE 1A4		
D105	8-719-054-32	DIODE ERA15-06		
D106	8-719-030-24	DIODE EG01C		
D107	8-719-920-32	DIODE ERA15-02		
D108	8-719-911-19	DIODE 1SS119		
D109	8-719-109-63	DIODE RD3.0ES		
D201	8-719-061-02	DIODE PR1003		
D202	8-719-052-52	DIODE 31DF2-FC5		
D203	8-719-018-83	DIODE D2S4M		
D204	8-719-061-02	DIODE PR1003		
D205	8-719-160-62	DIODE RD15FB2		
		< FUSE >		
⚠F101	1-532-388-31	FUSE, T2A		250V
		< IC >		
⚠IC201	8-759-420-19	IC AN1431T		
		< PHOTOCOUPLER >		
⚠PC101	8-719-924-35	PHOTOCOUPLER ON3171-R		
		< TRANSISTOR >		
Q101	8-729-032-85	TRANSISTOR 2SC4231		
Q102	8-729-012-31	TRANSISTOR 2SC4040Q		
		< RESISTOR >		
R108	1-260-315-51	CARBON	82	1/2W
R109	1-260-315-51	CARBON	82	1/2W
R110	1-244-869-11	CARBON	680	1/4W
R203	1-244-877-11	CARBON	1.5K	1/4W

MISCELLANEOUS
****

⚠9	1-782-000-21	CORD, POWER
11	1-762-844-21	SWITCH, ROTARY (E320)
⚠58	1-468-188-11	POWER BLOCK SR707
158	1-500-144-11	HEAD, FE
164	A-6736-105-A	ACE BLOCK ASSY
222	1-759-183-11	DRUM ASSY DZH-78A-R (E170,E320)
222	8-848-682-11	DRUM ASSY DZH-74B/Q-RP (E470)
M902	1-698-409-14	MOTOR, DC (CAPSTAN)
M903	X-3943-883-1	MOTOR ASSY,CAM

Ref. No.	Part No.	Description	Remarks
		ACCESSORIES & PACKING MATERIALS **********	
	1-475-025-11	REMOTE COMMANDER (RMT-V198)(E470)	
	1-475-025-31	REMOTE COMMANDER (RMT-V198B)(E170,E320)	
	1-696-593-11	CORD, CONNECTION (PAL)	
	1-770-321-21	ADAPTOR, CONVERSION 4P (E320EE,E470EE)	
	3-709-128-01	COVER, BATTERY (E470)	
	3-858-379-11	MANUAL, INSTRUCTION (ENGLISH)	
	3-858-379-21	MANUAL, INSTRUCTION (POLISH)	
	3-858-379-31	MANUAL, INSTRUCTION (RUSSIAN)	
	3-858-379-41	MANUAL, INSTRUCTION (POLISH)	
	3-858-379-51	MANUAL, INSTRUCTION (CZECK)	
*	3-973-671-01	INDIVIDUAL CARTON (E170EG)	
*	3-973-671-11	INDIVIDUAL CARTON (E470EG)	
*	3-973-671-21	INDIVIDUAL CARTON (E320EE)	
*	3-973-671-31	INDIVIDUAL CARTON (E470EE)	
*	3-973-671-41	INDIVIDUAL CARTON (E170EE)	
*	3-973-672-01	CUSHION	
*	3-973-861-01	SPACER	

****
HARDWARE LIST
****

#1	7-682-547-04	SCREW +P 3X6
#2	7-685-646-79	SCREW (3X8)(E470)
#5	7-624-190-61	STOP RING 2.4 TYPE-CS
#6	7-628-254-10	SCREW +PS2.6X6
#7	7-624-106-04	STOP RING 3.0,TYPE-E
#8	7-682-645-01	SCREW +PS3X4
#9	7-685-648-79	SCREW +BVTP 3X12 TYPE2

Note : The components identified by mark ⚠ or dotted line with mark ⚠ are critical for safety. Replace only with part number specified.

SECTION 6
INTERFACE, IC PIN FUNCTION DESCRIPTION

6-1. SYSTEM CONTROL — MECHANISM BLOCK INTERFACE (MA-293 Board IC160)

Signal	Pin No.	I/O	EJECTED	CASSETTE LOARDING	CASSETTE UNLOARDING	TAPE THREADING	TAPE UNTEREADING	STOP	FF	REW	PB	REC
CW	MA-293 Board IC160 ⑤⑧	O	*5	H	L	H	L	*5	*5	*5	*5	*5
CAM	MA-293 Board IC160 ⑤⑦	O	*5	*5	*5	*5	*5	*5	*5	*5	*5	*5
MODE 1	MA-293 Board IC160 ②⑨	I	—	—	—	—	—	H	H	H	H	H
MODE 2	MA-293 Board IC160 ②⑧	I	—	—	—	—	—	L	L	L	H	H
MODE 3	MA-293 Board IC160 ②⑦	I	—	—	—	—	—	H	H	H	L	L
MODE 4	MA-293 Board IC160 ②⑥	I	—	—	—	—	—	H	L	L	L	L
REC PRF	MA-293 Board IC160 ③⓪	I	L	*1	*1	*1	*1	*1	*1	*1	*1	*1
T REEL	MA-293 Board IC160 ⑧⓪	I	H/L	H/L	H/L	H/L	H/L	H/L	*2	*2	*2	*2
S REEL	MA-293 Board IC160 ⑦⑨	I	H/L	H/L	H/L	*2	*2	H/L	*2	*2	*2	*2
END LED	MA-293 Board IC160 ②⓪	O	L	*3	*3	*3	*3	*3	*3	*3	*3	*3
T SENS	MA-293 Board IC160 ⑦	I	*3	*3	*3	*4	*4	*4	*4	*4	*4	*4
S SENS	MA-293 Board IC160 ⑥	I	*3	*3	*3	*4	*4	*4	*4	*4	*4	*4

*1. "L" When erasing protection tab is bent. "H" when not bent.
*2. Pulse of period in proportion to reel rotating speed.
*3. Approx. 2 msec period "H" pulse when tape top or end is detected.
*4. Normally "L". 2 msec period "H" pulse when tape top or end is detected.
*5. Hi-Z

6-2. SYSTEM CONTROL — SERVO PERIPHERAL CIRCUIT INTERFACE (MA-293 Board IC160)

Signal	Pin No.	I/O	STOP	FF	REW	TAPE THREADING	TAPE UNTHREADING	PB	REC
CTL IN+	MA-293 Board IC160 ⑨②	O	*7	*7	*7	*7	*7	*7	*1
DRUM PG	MA-293 Board IC160 ⑧⑥	I	*3	*3	*3	*3	*3	*3	*3
DRUM FG	MA-293 Board IC160 ⑧⑦	I	*4	*4	*4	*4	*4	*4	*4
CAP FG	MA-293 Board IC160 ⑧⑤	I	H/L	*2	*2	*5	*5	*2	*2
CAP RVS	MA-293 Board IC160 ①⑥	O	H/L	L	H	L	H	L	L
CAP ERR	MA-293 Board IC160 ⑦⑦	O	L	*6	*6	*6	*6	*6	*6
DRUM ERR	MA-293 Board IC160 ⑦⑧	O	*6	*6	*6	*6	*6	*6	*6

*1. 25 Hz pulse
*2. Pulse of period in propotion to tape speed.
*3. 25 Hz "H" pulse.
*4. 600 Hz pulse.
*5. Unstable period pulse.
*6. DC voltage 1 ~ 5V.
*7. Hi-Z (2.5V).

6-3. SYSTEM CONTROL — SYSTEM CONTROL PERIPHERAL CIRCUIT INTERFACE (MA-293 Board IC160)

Signal	Pin No.	I/O	I/O level
RESET	MA-293 Board IC160 ㊸	I	Normally "H". "L" when service interruption detected or restored.
PLL DATA (12C DATA1)	MA-293 Board IC160 ㉒	I/O	Serial communication data to audio microprocessor.
12C CLOCK1	MA-293 Board IC160 ⑰	O	Serial communication clock to audio microprocessor.
12C DATA VIDEO	MA-293 Board IC160 ㊷	I/O	Serial communication data to video microprocessor.
12C CLOCK VIDEO	MA-293 Board IC160 ㊶	O	Serial communication clock to video microprocessor.
(RP) S OUT1	MA-293 Board IC160 ㊺	I/O	Serial communication data to RP microprocessor.
(RP) S CLK1	MA-293 Board IC160 ㊼	O	Serial communication clock to RP microprocessor.

6-4. SYSTEM CONTROL — VIDEO/RP BLOCK INTERFACE (MA-293 Board IC160)

Signal	Pin No.	I/O	STOP/FF /REW	TAPE LOADING	TAPE UNLOADING	PB	REC	REC PAUSE
RF SWP	MA-293 Board IC160 ⑱	O	*1	*1	*1	*1	*1	*1
QVD	MA-293 Board IC160 ⑬	O	L	L	L	*2	L	L
REC P	MA-293 Board IC160 ㊾	O	L	L	L	L	L	H
C SYNC	MA-293 Board IC160 ㊹	I	*3	*3	*3	*3	*3	*3

*1. Synchronized with drum rocation. 25Hz 50% duty pulse.
*2. Normal "L". "H" when video signal is not rgenerated.
*3. Composite sync signal (positive).

6-5. SYSTEM CONTROL — AUDIO BLOCK INTERFACE (MA-293 Board IC160)

Signal	Pin No.	I/O	STOP/FF /REW	TAPE LOADING	TAPE UNLOADING	PB	REC	REC PAUSE
A MUTE	MA-293 Board IC160 ㊽	O	L	L	L	L	L	H

6-6. SERVO/SYSTEM CONTROL MICROPROCESSOR (MA-293 Board IC160)

Pin.No.	Signal	I/O	Function
1	—	—	—
2	—	—	—
3	TU AFT	I	Tuner analog AFT input
4	FUNC KEY 2	I	9 key input
5	FUNC KEY 1	I	9 key input
6	SSENS	I	Tape end sensor
7	TSENS	I	Tape top sensor
8	VIDEO RF	I	Video RF input
9	AF ENV	I	HiFi envelope
10	—	—	—
11	—	—	—
12	STEREO	I	Tuner stereo detection input L: Stereo
13	QVD	O	Quasi VD
14	REMOCON	I	Infrared ray catcher
15	F MONO	O	Forced mono
16	CAP RVS	O	Capstan reverse
17	I2C CLOCK 1	O	I2C clock (EEPROM, HiFi, PLL MOD)
18	RF SWP	O	RF switching pulse
19	AF SWP	O	HiFi switching pulse
20	END LED	O	End sensor LED output
21	AV CONT	O	AVcontrol signal output.
22	PLL DATA	I/O	Tuner PLL data (TU)/I2C data (EEPROM, HiFi, PLL MOD)
23	PLL CLK	O	Tuner PLL clock
24	T ENABLE	O	Tuner enable
25	SAP	I	SAP discrimination
26	MODE 4	I	Cam encoding data 4
27	MODE 3	I	Cam encoding data 3
28	MODE 2	I	Cam encoding data 2
29	MODE 1	I	Cam encoding data 1
30	RECPRF	I	Mis-record prevention switch signal input
31	DEST1	I	Destination discrimination input 1
32	DEST2	I	Destination discrimination input 2
33	DEST3	I	Destination discrimination input 3
34	NUB	I	Ground
35	NUA	I	Ground
36	CLKSEL	I	5V
37	VCC	I	5V
38	XIN	I	16MHz
39	XOUT	O	16MHz
40	VSS	I	Ground
41	XCIN	I	32kHz
42	XCOUT	O	32kHz
43	RESET	I	Reset signal input
44	NT JUDGE	I	L: NTSC
45	—	—	—
46	CBC ON	O	Cable box control signal output
47	ME SECAM	O	ME SECAM signal output.
48	AMUTE	O	Audio mute
49	REC P	O	HiFi audio record control
50	REC	O	Not used

Pin.No.	Signal	I/O	Function
51	I2C CLOCK VI	O	I2C clock (Video)
52	I2C DATA VI	O	I2C data (Video)
53	TA MUTE	O	Tuner-audio mute
54	DMS DOWN	I	DMS control
55	DMS UP	I	DMS control
56	P CONT M12	O	Motor 12V control
57	CAM	I/O	Cam motor control 1
58	CW	I/O	Cam motor control 2
59	P CONT SW12	O	SW 12V control
60	AUTO PRESET	O	Not used
61	—	—	—
62	—	—	—
63	—	—	—
64	OSD CS	O	OSD chip select
65	SOUT 1	O	Serial out Ch1 (RP)
66	FLD CS	O	Fluorescent display driver chip select
67	SCLK 1	O	Serial clock Ch1 (RP)
68	SOUT 0	O	Serial out Ch0 (FLD, OSD)
69	SIN 0	I	Serial in Ch0 (FLD, OSD)
70	SCLK 0	O	Serial clock Ch0 (FLD, OSD)
71	—	—	—
72	BUZZER	I/O	Buzzer
73	CBC	O	Remote control signal output (CBC)
74	MAIN/SAP	O	MAIN/SAP select
75	PFAIL	I	Power fail detection input
76	—	—	—
77	CAP ERR	O	Capstan error output
78	DRUM ERR	O	Drum error output
79	SREEL	I	Supply reel sensor
80	TREEL	I	Take-up reel sensor
81	—	—	—
82	—	—	—
83	—	—	—
84	CSYNC	I	Composite sync signal input
85	CAPFG	I	Capstan FG signal input
86	DRMPG	I	Drum PG signal input
87	DRMFG	I	Drum FG signal input
88	AMP VSS	I	CTL amp
89	AMP VREF OUT	O	CTL amp
90	AMP VREF IN	I	CTL amp
91	CTLIN-	I/O	CTL signal I/O
92	CTLIN+	I/O	CTL signal I/O
93	CTL SWOUT	O	CTL amp
94	CTL AMP IN	I	CTL amp
95	AMPC	I	CTL amp
96	CTL VSS	I	CTL amp
97	CTL AMP OUT	O	CTL amp
98	AMPVCC	I	CTL amp
99	AVCC	I	AN5V
100	CTL GAIN	O	CTL gain adjustment

SECTION 7
ADJUSTMENTS

7-1 MECHANICAL ADJUSTMENTS

For the mechanical adjustments, please refer to the "VHS MECHANICAL ADJUSTMENT MANUAL Ⅳ (H MECHANISM)" (9-973-623-11).

7-2. ELECTRICAL ADJUSTMENTS

See the adjusting part location diagram from on page 7-6 for the adjustment.

2-1. PREPARATION BEFORE ADJUSTMENT

2-1-1. Equipment Required

The measuring instruments used for this alignment include:

1) Monitor TV
2) Oscilloscope, dual-trace, bandwidth of 30MHz or more, with delay mode (A probe 10:1 should be used unless otherwise specified.)
3) Frequency counter
4) Pattern generator
5) Digital voltmeter
6) Audio generator
7) Audio level meter
8) Audio distortion meter
9) Audio attenuator
10) Alignment tapes
    KRV-51P Part No. : 8-192-605-36

2-1-2. Equipment Connection

Unless otherwise specified, connect and adjust the measuring instruments as shown in the following diagram.

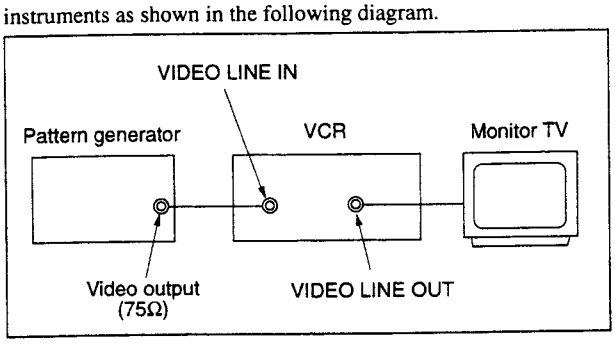

Fig. 7-2-1.

2-1-3. Input Signal Check

Video signal produced by a pattern generator is used as an adjustment signal to perform electrical alignment for this unit. This video signal must satisfy the specification.

Unless otherwise specified, place the switches and controls of this unit in the following positions:

- CHANNEL switch ..... LINE

Connect an oscilloscope to the Video Input terminal. Check that the synchronizing signal of the Y signal has an amplitude of approximately 0.7V and that the burst signal has an amplitude of approximately 0.3V and its waveform is flat. And check that the level ratio of burst signal to "red" signal is 0.30 : 0.66. The video signal (color bar) used for electrical aligning this unit is shown in Fig. 7-2-2.

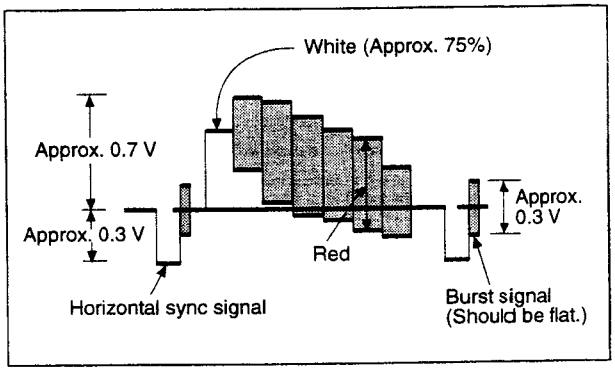

Fig. 7-2-2. Color Bar Signals of Pattern Generator

2-1-4. Alignment Tape

• Contents of KRV-51P

	Mode	Period	Video signal	Audio signal	
				Hi-Fi	Normal
1	SP	7 minutes	Color bar	400Hz	400Hz
2		3 minutes	Monoscope		
3	EP	7 minutes	Color bar		
4		3 minutes	Monoscope		

2-1-5. Input/Output Levels and Impedance

Video input: LINE IN
(phone jack) (1)
Input signal: 1Vp-p, 75ohms, unbalanced, sync negative

Video output: LINE OUT
(phone jack) (1)
Output signal: 1Vp-p, 75ohms, unbalanced, sync negative

Audio input: LINE IN
(phone jack) (1)
Input level: –7.5 dBs
(0dBs= 0.775Vrms)
Input impedance: more than 47 kilohms

Audio output: LINE OUT
(phone jack) (1)
Standard level: –7.5dBs at load impedance 47 kilohms
Output impedance: less than 10 kilohms

2-1-6. Adjustment Sequence

The adjustments should be performed in the following sequence.

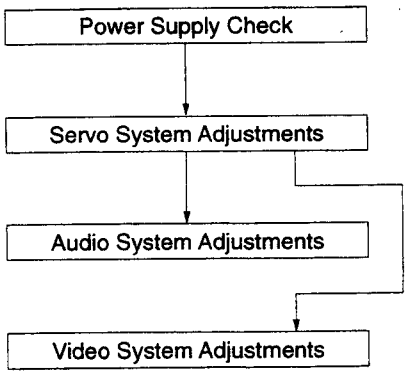

2-2. POWER SUPPLY CHECK

2-2-1. Output Voltage Check (MA-293 Board)

Mode	E-E
Measuring Instrument	Digital voltmeter
SW 12V Check	
Measurement point	IC600 pin ②
Specified value	12.0 ± 0.3V
MTR12V Check	
Measurement point	D600 cathode
Specified value	12.4 ± 1.0V
SW5V Check	
Measurement point	Q602 emitter
Specified value	5.1 ± 0.2V
D5V Check	
Measurement point	D161 cathode
Specified value	5.1 ± 0.3V

[Check Method]

1) Each of these supply voltages must meet its specified value.

2-3. SERVO SYSTEM CHECK

Unless otherwise specified, set the switches to the following positions.

- CHANNEL switch ..... LINE
- TAPE SPEED switch ..... SP

2-3-1. RF Switching Position Adjustment (MA-293 Board)

[Adjustment Purpose]

To adjust the link of the A-ch and B-ch of the tape playback outputs. To make the unit compatible with other tapes and units. If this specification is not satisfied, the link will appear on the screen and the screen will be disrupted, etc.

Mode	Playback
Signal	Alignment tape: SP color bar portion
Measurement point	CH1: Video LINE OUT terminal CH2: CN261 pin ③ (RF SWP)
Measuring instrument	Oscilloscope
Specified value	6.5 ± 0.5H (416 ± 32 μsec)

[Adjustment Method]

1) Short-circuit between JS401 and ground on MA-293 board for about 1 second to activate the RF switching position adjustment mode.
2) Check that "ADJ" is indicated on FL display.
3) Using the channel + and – buttons, adjust to 416 ± 32μsec (6.5 ± 0.5H).
4) Press the PAUSE button.
5) Press the EJECT button.

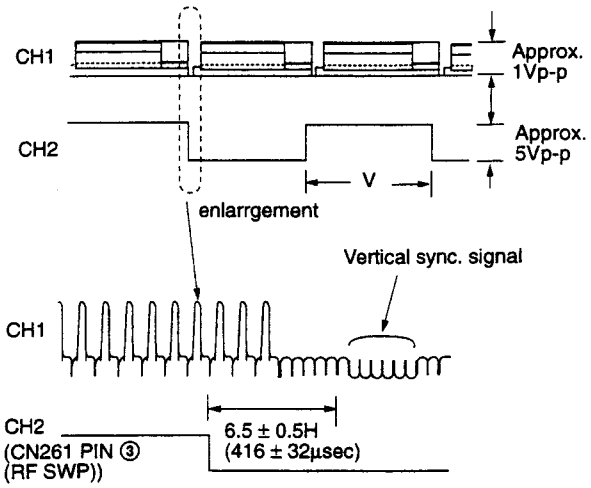

Fig. 7-2-3.

2-4. VIDEO SYSTEM CHECKS

For the video system checks, follow the checking procedures given below as a rule. The color bar video signal supplied from the pattern generator is used as the video input signal for the video system adjustment of the recording mode. Check that the signal satisfies the specified value designated in the "Check of input signal" (Fig. 7-2-2)

Unless otherwise specified, set the switches to the following positions.

- CHANNEL switch ..... LINE
- TAPE SPEED switch ..... SP

[Checking Sequence]

1) X'tal OSC Check
2) SYNC AGC Check
3) White clip/Dark clip Check
4) Recording Y Level Check
5) Recording Chroma Level Check
6) Playback Level Check

2-4-1. X'tal OSC Check (MA-293 Board)

Mode	Playback
Signal	Alignment tape: SP Color bar portion
Measurement point	IC201 pin ㊿
Measuring instrument	Oscilloscope and Frequency counter
Specified value	4,433,619 ± 96Hz

Note: A frequency counter should be connected through a buffer amplifier (oscilloscope, etc.) having a high impedance and a low capacitance.

[Check Method]

1) Check that the oscillation frequency satisfies the specified value and that the oscillation voltage is 500 ± 200mVp-p.

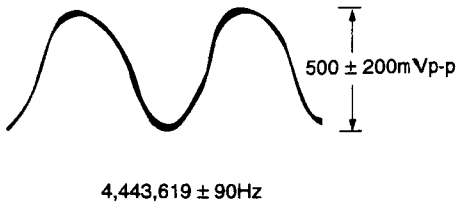

Fig. 7-2-4.

2-4-2. SYNC AGC Check (MA-293 Board)

Mode	E-E
Signal	Color bar
Measurement point	Video LINE OUT terminal
Measuring instrument	Oscilloscope
Specified value	A=2.10 ± 0.14Vp-p (75Ω terminated)

[Check Method]

1) Check that the Video signal level (A) satisfies the specified value.

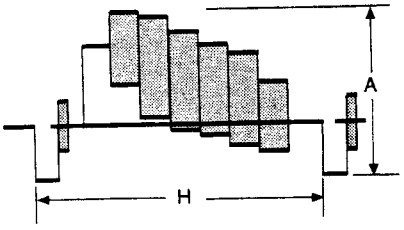

Fig. 7-2-5.

2-4-3. White Clip/Dark Clip Check (MA-293 Board)

Mode	E-E
Signal	Color bar
Measurement point	IC201 pin ㊲
Measuring instrument	Oscilloscope
Specified value	White clip: 190 ± 15% Dark clip: 55 ± 10%

[Check Method]

1) Check that the white clip level is 190 ± 15% to the white (100%) level.
2) Check that the dark chip level is 55 ± 10% to the white (100%) level.

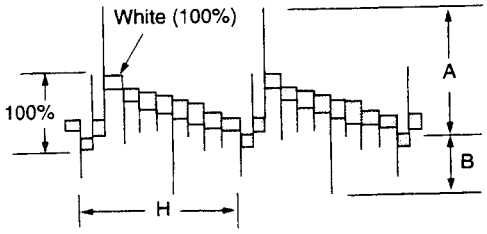

Fig. 7-2-6.

2-4-4. Recording Y Level Check (MA-293 Board)

Mode	E-E
Signal	No-signal
Measurement point	IC201 pin ⑱
Measuring instrument	Oscilloscope
Specified value	A=360 ± 100mV

[Check Method]

1) Check that the recording RF signal satisfies the specified value.

Fig. 7-2-7.

2-4-5. Recording Chroma Level Check (MA-293 Board)

Mode	Recording
Signal	Color bar
Measurement point	IC201 pin ⑭
Measuring instrument	Oscilloscope
Specified value	A=350 ± 70mV

[Check Method]

1) Confirm the amplitude of recording chroma level becomes the specified value.

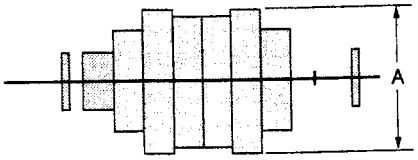

Fig. 7-2-8.

2-4-6. Playback Level Check (MA-293 Board)

Mode	Playback
Signal Alignment	Tape: SP mode color bar portion
Measurement point	Video LINE OUT terminal
Measuring instrument	Oscilloscope
Specified value	A=2.10 ± 0.18Vp-p (75Ω terminated)

[Check Method]

1) Check that the playback level satisfies the specified value.

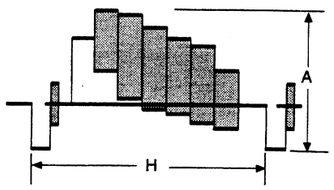

Fig. 7-2-9.

2-5. AUDIO SYSTEM ADJUSTMENT

- For the adjustment of the audio system, perform in the SP mode if there is no special notes. Use the alignment tape.

[Connecting Instruments]

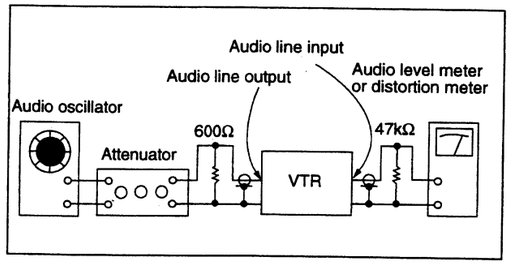

Fig. 7-2-10.

- Adjust in the SP mode if there is no special indications.
- Perform the adjustment setting the switch on the following positions.

- [CHANNEL] switch ..... LINE

[Adjustment Method]

1. ACE head adjustment.....Refer to the VHS mechanical adjustment manual Ⅳ.
2. E-E output level check
3. Overall Output level and distortion factor check
4. Overall noise level check.

2-5-1. ACE Head Adjustment

Refer to the "VHS mechanical adjustment manual Ⅳ" (9-973-623-11).

2-5-2. E-E Output Level Check

Mode	E-E
Signal	400Hz, –7.5dBs: Audio LINE IN
Measurement point	Audio LINE OUT terminal
Measuring instrument	Audio level meter
Specified value	–7.5 ± 2dBs

[Check Method]

1) Input signal of 400Hz and –7.5dBs to the audio input.
2) Check that the audio output level is –7.5 ± 2dBs.

2-5-3. Overall Output Level and Distortion Factor Check

Mode	Self-record playback
Signal	400Hz, –7.5dBs: Audio LINE IN
Measurement point	Audio LINE OUT terminal
Measuring instrument	Audio level meter and Distortion meter
Specified value	Playback Level: –7.5 ± 3dBs Distortion: 4.0% or less

[Check Method]

1) Input signal of 400Hz and –7.5dBs to the audio input.
2) Record signal.
3) Playback the recorded portion.
4) Check that the output level is –7.5 ± 3dBs.
5) Check that the distortion factor is 4.0% or less.

2-5-4. Overall Noise Level Check

Mode	Self-record playback
Signal	No signal (Insert a shorting plug into the Audio LINE IN terminal)
Measurement point	Audio LINE OUT terminal
Measuring instrument	Audio level meter (IHF-A weighing filter is used)
Specified value	– 46dBs or less

[Check Method]

1) Record.
2) Playback recorded portion.
3) Check that noise level is – 46dBs or less.

2-6. ADJUSTMENT PARTS LOCATION DIAGRAM

MA-293 BOARD (CANDUCTOR SIDE)

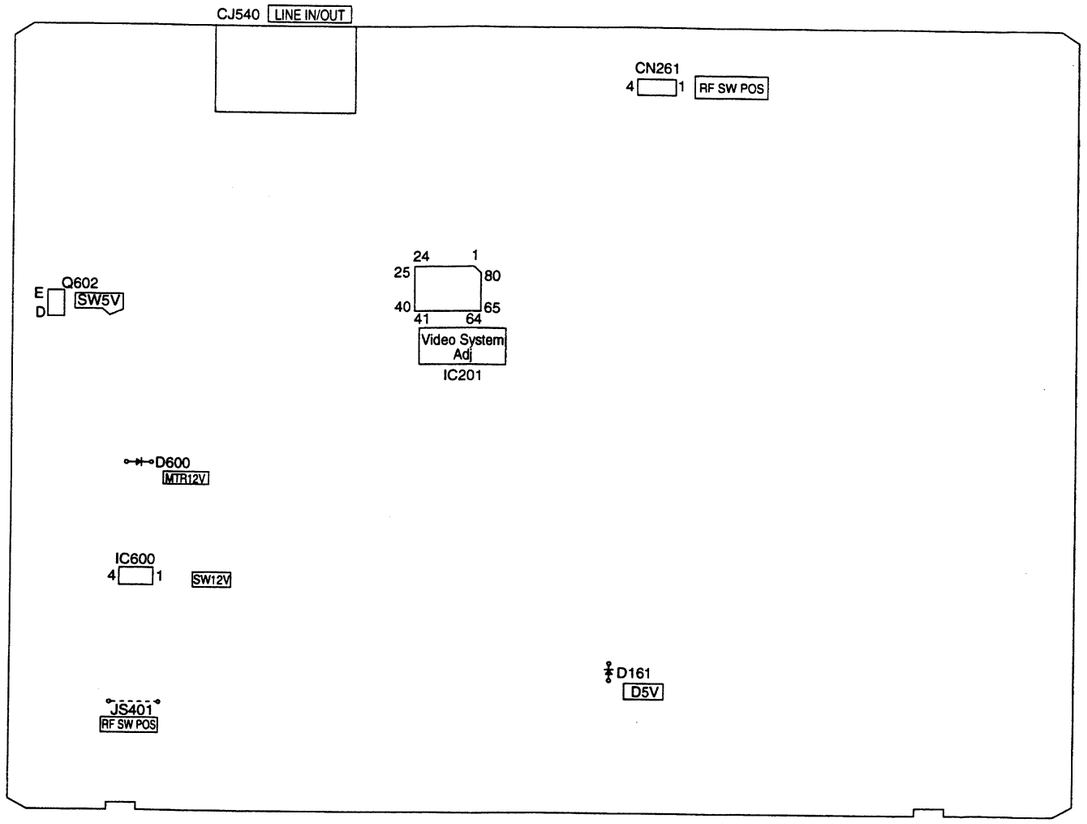

VHS MECHANICAL ADJUSTMENT MANUAL IV

H MECHANISM

Please use with the service manual.

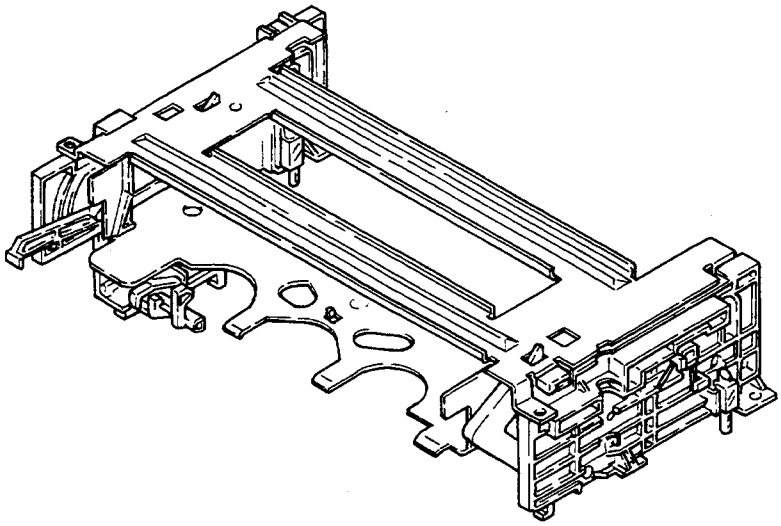

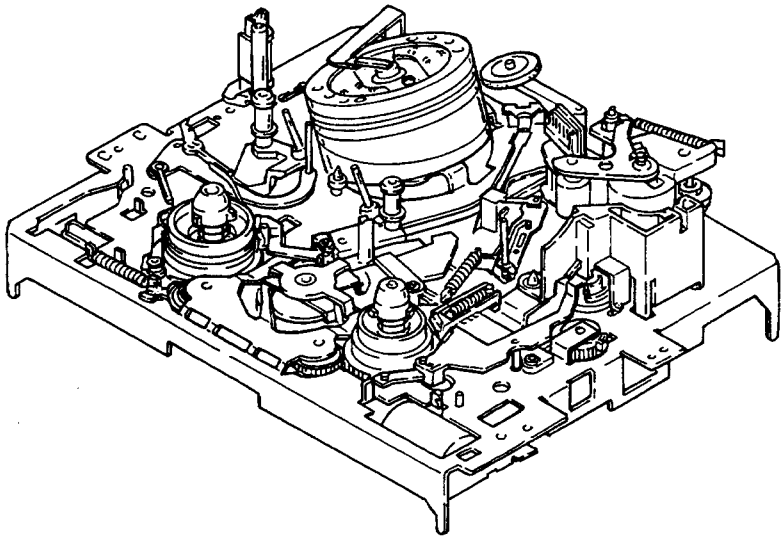

VHS VIDEO CASSETTE RECORDER

SONY®

MICROFILM

TABLE OF CONTENTS

Section	Title	Page
1.	PREPARATION FOR MECHANISM CHECK ADJUSTMENT AND REPLACEMENT	
1-1.	Loading and Threading Procedure When the Power Turns Off (Fig. 1-1)	3
1-1-1.	Loading and Threading Procedure With Hands	3
1-1-2.	Loading and Threading Procedure With Regulated DC Power Supply	3
1-2.	Unloading and Unthreading Procedure When the Power Turns Off (Figs. 1-2 and 1-3)	4
1-2-1.	Unloading and Unthreading Procedure With Hands	4
1-2-2.	Unloading and Unthreading Procedure With Regulated DC Power Supply	4
1-3.	How to Complete Threading Without Cassette Compartment (Fig. 1-4)	6
2.	PERIODIC CHECK AND REPLACEMENT	
2-1.	Cleaning of Rotating Head Disk Assembly	7
2-2.	Cleaning of the Tape Movement System	7
2-3.	Cleaning the Drive System	7
2-4.	Periodic Check Items	8
2-5.	Tools and Fixtures Required for Servicing	9
3.	MAINLY MECHANICAL PARTS REPLACEMENT	
3-1.	FL Block Assembly (Fig. 3-1)	10
3-2.	Drum Assembly (Fig. 3-2)	11
3-3.	Timing Belt (Fig. 3-3)	12
3-4.	Cap Brake Assembly (Fig. 3-4)	13
3-5.	TG2 Roller, FE Head Assembly (Fig. 3-5)	14
3-6.	Pinch Press Block Assembly, Elevator Gear (Fig. 3-6)	15
3-7.	Ace Block Assembly (Fig. 3-7)	16
3-8.	TG3, TG6 Guide Roller Assemblies (Fig. 3-8)	17
3-9.	Capstan Motor (Fig. 3-11)	19
3-10.	Main Brake Assemblies S and T (Fig. 3-12)	20
3-11.	Soft Brake T Assembly (Fig. 3-13)	21
3-12.	RVS Brake Arm Assembly, Reel Table (T) Assembly (Fig. 3-14)	22
3-13.	TG8 Assembly (Fig. 3-15)	23
3-14.	TG8 Holder (Fig. 3-16)	24
3-15.	TG8 and Press Gears (Fig. 3-17)	25
3-16.	Cam Motor Chassis Block Assembly, Upper/Lower Communication Gear (Fig. 3-18)	26
3-17.	Rotary Encoder Switch (Fig. 3-19)	27
3-18.	Main Slider (Fig. 3-20)	28
3-19.	Shuttle T Block and Loading Gear T Block Assemblies (Fig. 3-21)	29
3-20.	Shuttle S Block and Loading Gear S Block Assemblies (Fig. 3-22)	30
3-21.	Reel Table (S) Assembly (Fig. 3-23)	31
3-22.	TG1 Assembly (Fig. 3-24)	32
3-23.	S Winding Block Assembly (Fig. 3-25)	33
3-24.	Trigger Lever and RKB Block Assemblies (Fig. 3-26)	34
4.	ADJUSTMENT	
4-1.	Tape Path Adjustment	35
4-1-1.	Tension Regulator (TG1) Position/ Tension Adjustment (Fig. 4-1)	35
4-1-2.	TG8 Guide Roller Height Adjustment (Fig. 4-2)	36
4-1-3.	Height Adjustment of Guide Rollers No. 3 and No. 6 (Fig. 4-3)	36
4-1-4.	Ace Head Assembly Adjustment (Rough Adjustment) (Figs. 4-4 and 4-5)	37
4-1-5.	Ace Head Assembly Adjustment (Precision Adjustment)	38
4-1-6.	X-Value Adjustment	38
4-1-7.	Adjustments After Replacing the Drum (Video Head)	40
4-1-8.	Checking the Tension and Torque	42

1. PREPARATION FOR MECHANISM CHECK ADJUSTMENT AND REPLACEMENT

Refer to the service manual, "DISASSEMBLY" for removal of the cabinet and boards.

1-1. LOADING AND THREADING PROCEDURE WHEN THE POWER TURNS OFF (Fig. 1-1)

1-1-1. LOADING AND THREADING PROCEDURE WITH HANDS

1) Turn cam motor in the arrow Ⓐ direction until loading and threading are end.

1-1-2. LOADING AND THREADING PROCEDURE WITH REGULATED DC POWER SUPPLY

1) Applying approx. +9 V (300 mA) to cam motor with regulated DC power supply makes it loading and threading.

Note: When loading and threading without cassette, claws are caught in four positions as following figure (in the order ① → ② → ③ → ④).
So release them with hands.

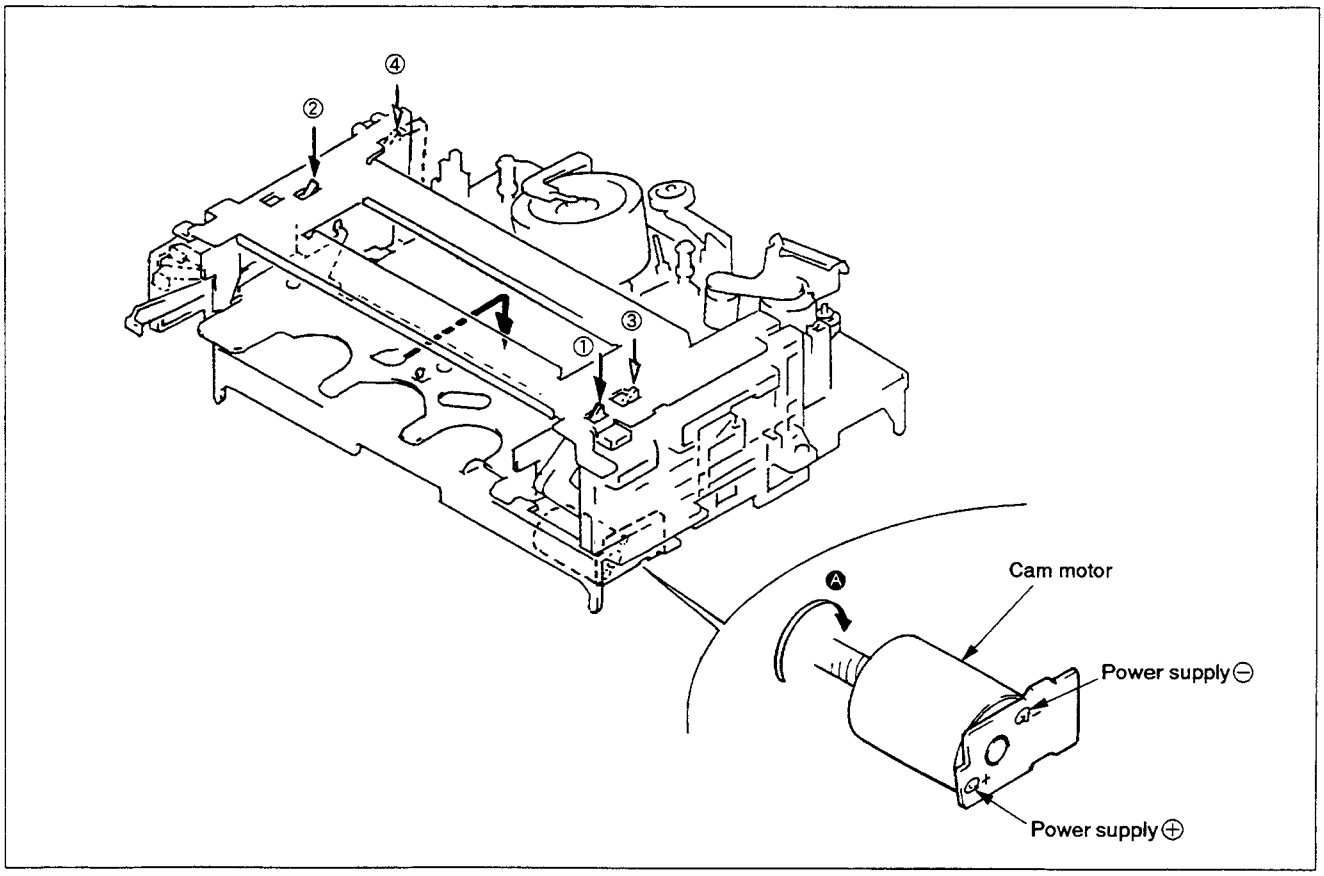

Fig. 1-1

1-2. UNLOADING AND UNTHREADING PROCEDURE WHEN THE POWER TURNS OFF (Figs. 1-2 and 1-3)

1-2-1. UNLOADING AND UNTHREADING PROCEDURE WITH HANDS

1) Turn cam motor in the arrow Ⓑ direction until unthreading is end.
2) Turn capstan motor in the arrow Ⓒ direction to take up tape in cassette.
3) Turn cam motor in the arrow Ⓑ direction until unloading is end.

1-2-2. UNLOADING AND UNTHREADING PROCEDURE WITH REGULATED DC POWER SUPPLY

1) Apply approx. +9 V (300 mA) to contrary polarities of cam motor.
2) Unthreading operation begins, tape guides return to their original positions (Unthreading operation is end but tape remains), then stop cam motor by turning power off.

Note: When unloading begins and cassette lid is closed, turn cam motor in the arrow Ⓐ direction to open tape guard.

3) Turn capstan motor in the arrow Ⓒ direction to take up tape in cassette.

Note: That tape is not caught at pinch roller. (Fig. 1-3)

4) Check that tape is not loosened completely, and apply approx. +9 V (300 mA) to contrary polarities of cam motor with regulated DC power supply. (Fig. 1-2)

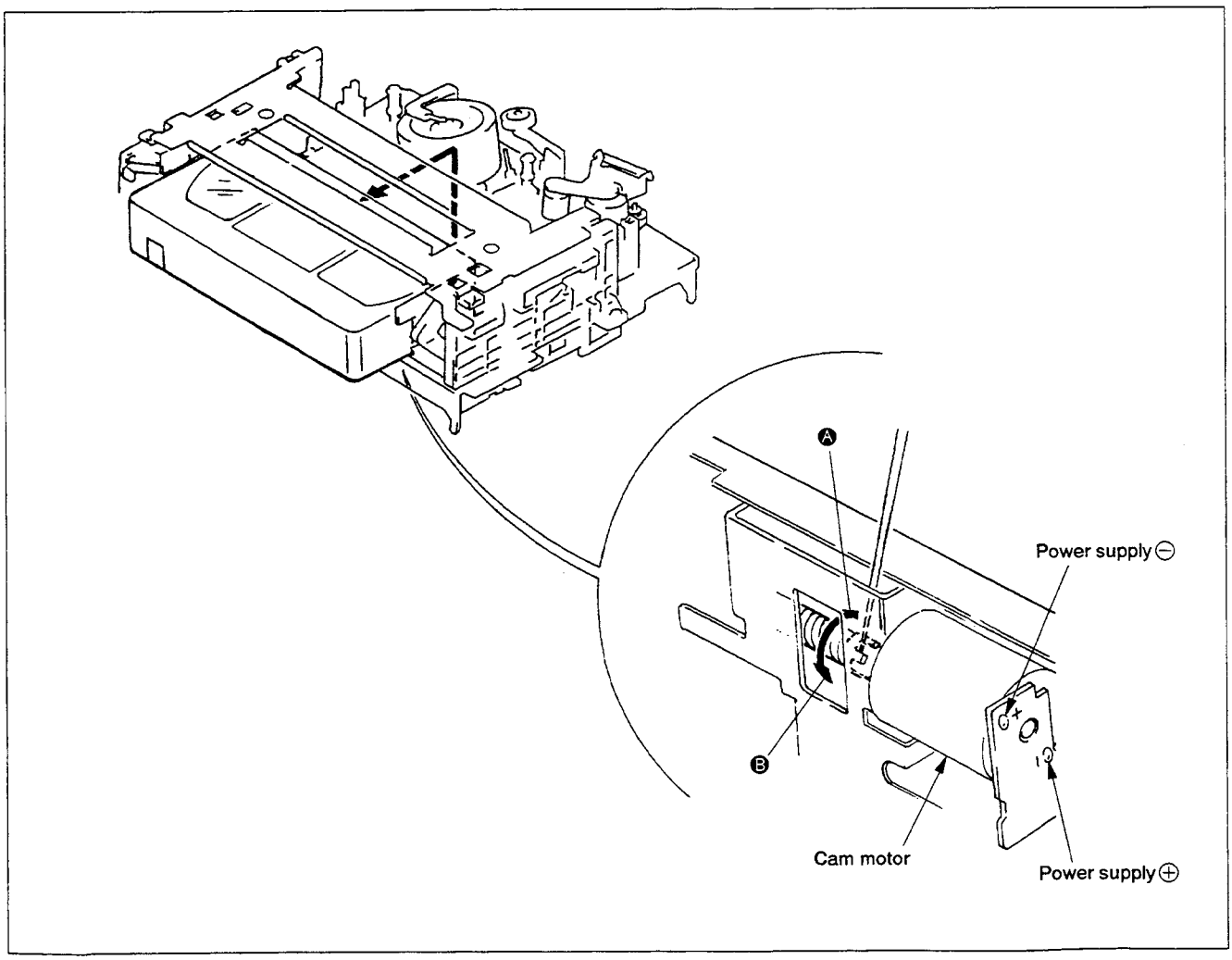

Fig. 1-2

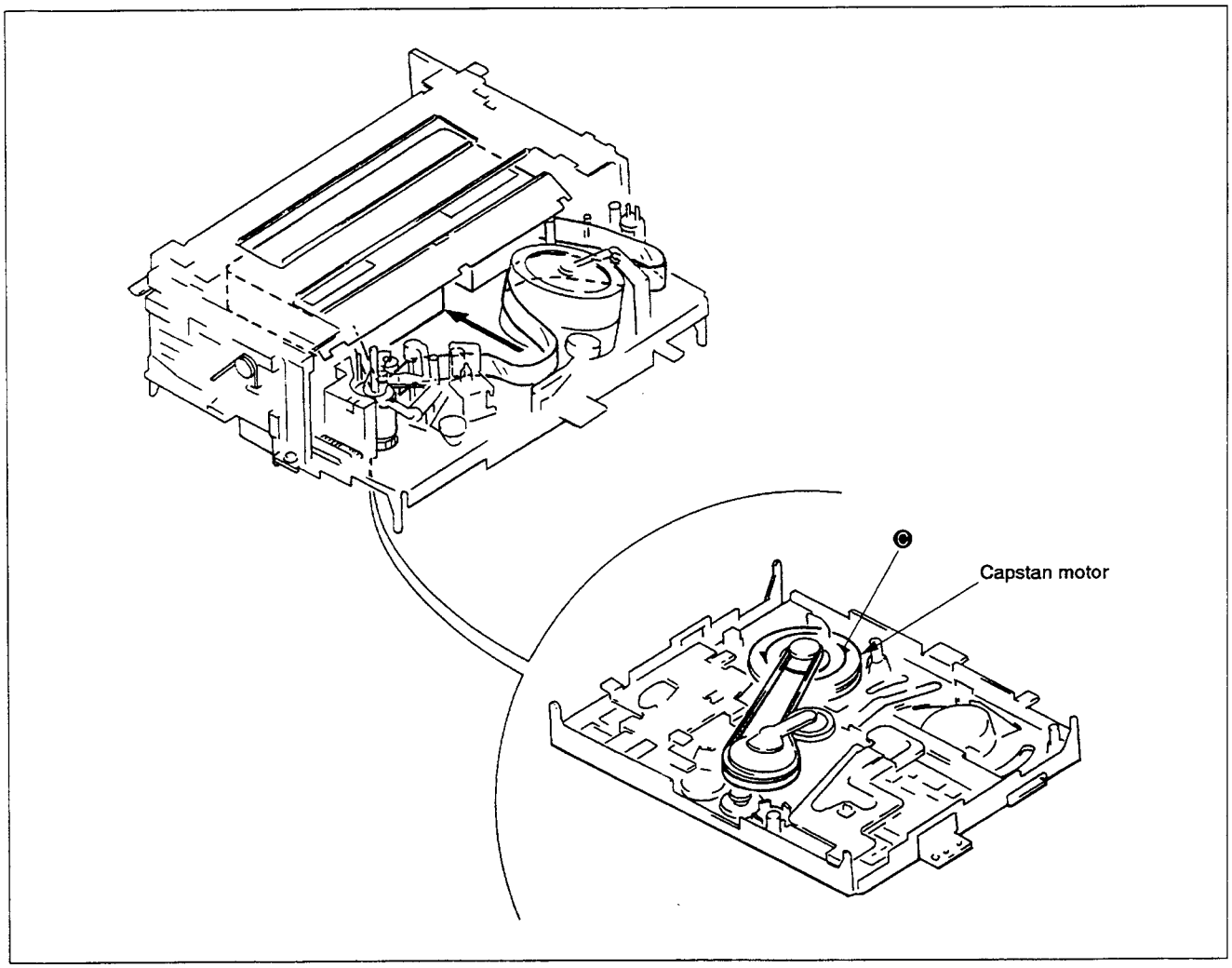

Fig. 1-3

1-3. HOW TO COMPLETE THREADING WITHOUT CASSETTE COMPARTMENT (Fig. 1-4)

Note 1: Put the FL block assembly removed the FL top plate on the bottom not to put dust or grease the top sensor and the end sensor luminous plates or not to scratch them. (Fig. A)

1) Pull out AC plug from wall outlet.
2) Shade near the end and top sensors with a black masking tape on the like.
3) Press cassette in/rec proof switch with a tip of screwdriver or the like.
4) Connect AC plug to wall outlet.
5) Release cassette in/rec proof switch by putting off a tip of screwdriver or the like.
   (At this time, power turns on, rewind operates for 10 seconds, after that power turns off.)

Note 2: In this condition, each mode can be set to video cassette recorder. (including recording mode)
However, fast forward should be done after rewinding for 15 seconds or more.

Note 3: After above mentioned operation, be sure to return the mode in the following order.

1) Remove the tape near the end and top sensors.
2) Pull out AC plug from wall outlet to reset the system control microcomputer.

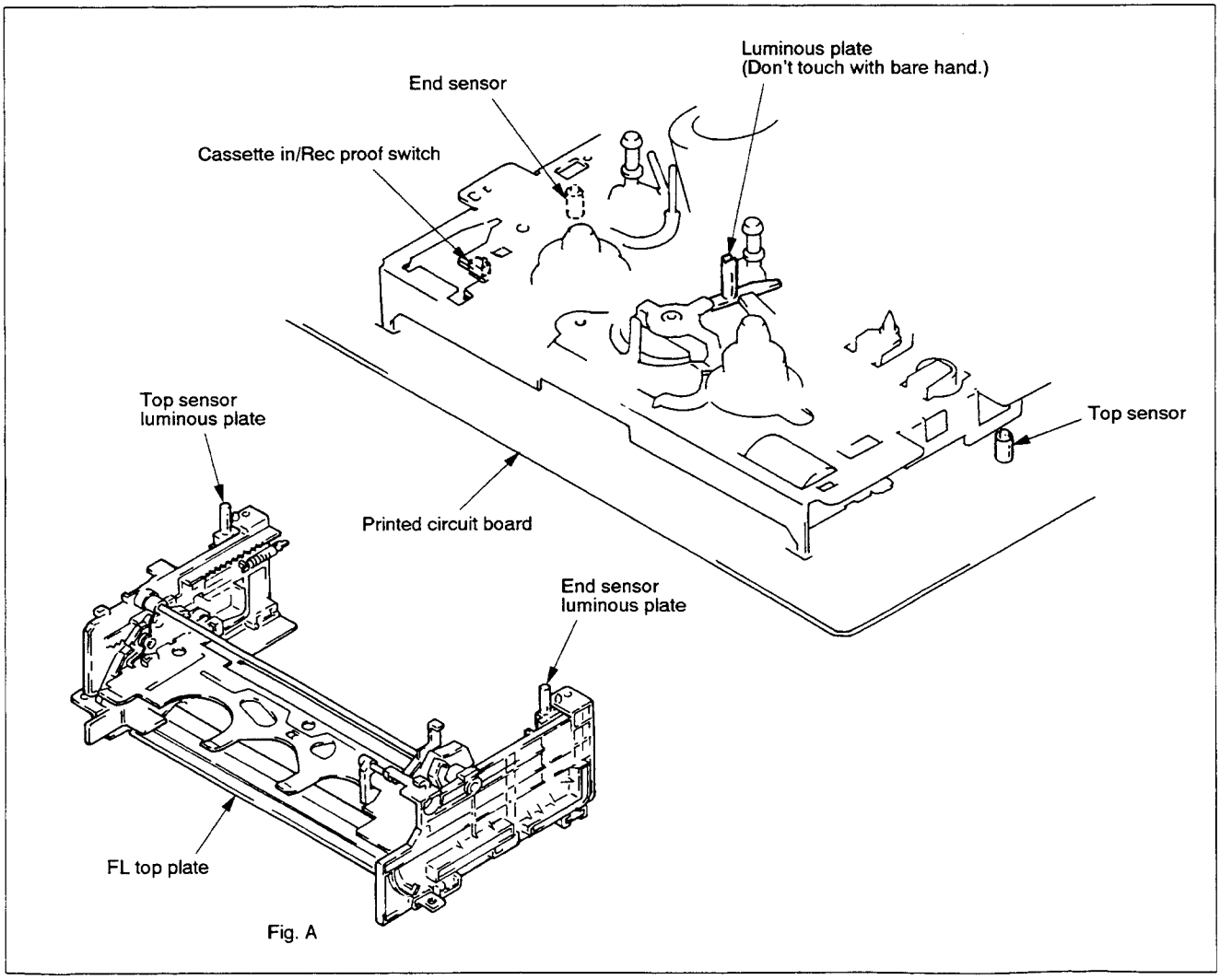

Fig. 1-4

2. PERIODIC CHECK AND REPLACEMENT

In order to obtain the best performance from this unit and make full use of its capabilities, and to extend the life of the unit and tapes, it is recommended that the following periodic checks and maintenance be performed.

* The following must be done after every repair regardless of how many hours the user has operated the machine.

2-1. CLEANING OF ROTATING HEAD DISK ASSEMBLY

1) Press a chamois cloth (Jig Ref. No. J-9) which has been dipped in cleaning fluid (Jig Ref. No. J-8) lightly against the rotating drum assembly, then do the cleaning by slowly rotating the rotating head disk by hand. (Never try to clean by using the motor to turn it.)
2) Never try to clean by moving the chamois cloth at a vertical angle to the head tip. There is a very great danger of damaging the head tip if this is done.

2-2. CLEANING OF THE TAPE MOVEMENT SYSTEM

1) Clean the surfaces which the tape contacts during its movement (tape guide, drum assembly surface, capstan, pinch roller, etc.) with a chamois cloth that has been dipped in cleaning fluid.

2-3. CLEANING THE DRIVE SYSTEM

1) Clean the driving parts with a cloth that been dipped in cleaning fluid.

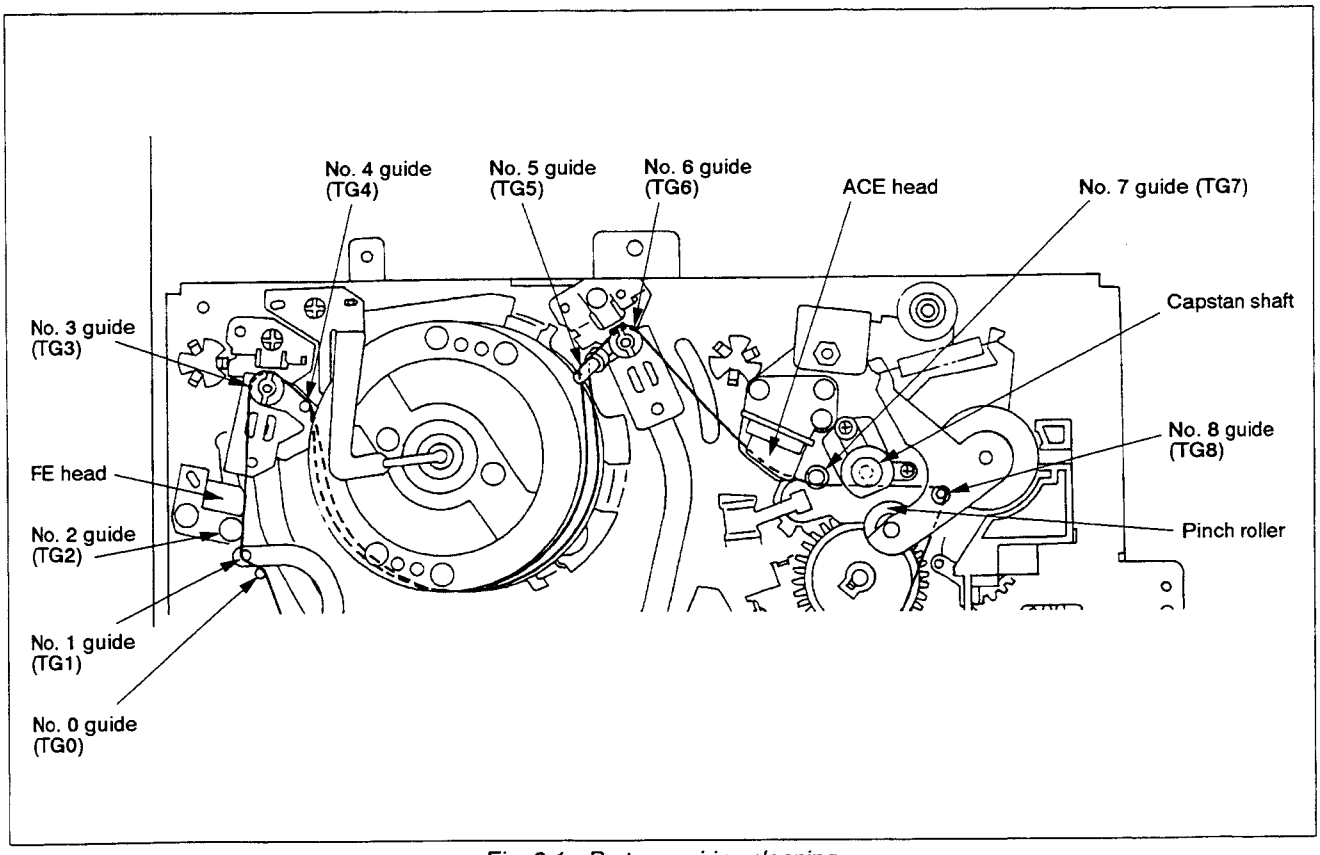

Fig. 2-1 Parts requiring cleaning

2-4. PERIODIC CHECK ITEMS

Perform the maintenance and check listed on the table below, according to users operating hours.

Maintenance & Check \ Operating Hours (H)		500	1,000	1,500	2,000	2,500	3,000	3,500	4,000	4,500	5,000	Remarks
Tape Transportation System	Cleaning of tape transportation system	○	○	○	○	○	○	○	○	○	○	This cleaning must be done whenever a repair is made.
	Cleaning and degaussing of ACE assembly	○	○	○	○	○	○	○	○	○	○	
	Cleaning & degaussing of upper drum assembly	○	○	○	○	○	○	○	○	○	○	The life of the head varies, depending on operational conditions and method.
Performance Confirmation	Abnormal sound	☆	☆	☆	☆	☆	☆	☆	☆	☆	☆	Adjust or replace the section which causes abnormal sound.
	Measurement of FWD back tension	–	☆	–	☆	–	☆	–	☆	–	☆	Confirmation must be made according to 4-1-1. Specified value: adjust to 36 to 44 g•cm (when measured with torque cassette tape)
	Confirmation of brake system	–	☆	–	☆	–	☆	–	☆	–	☆	Confirmation must be made according to section.
	Confirmation of record & playback functions	☆	☆	☆	☆	☆	☆	☆	☆	☆	☆	Perform the confirmation whenever repair is made.
	Measurement of forward torque	☆	☆	☆	☆	☆	☆	☆	☆	☆	☆	Adjust to 70 to 120 g•cm

○ Cleaning ☆ Confirmation

Note: On overhaul
When overhauling the unit, replace parts as indicated in the above table.

2-5. TOOLS AND FIXTURES REQUIRED FOR SERVICING

Ref No.	Name	Part No.	Carved Jig No.	Remarks
J-1	Master Plane	H-7099-279-H		Applicable to S-VHS
J-2	Reel Disk Height Jig	H-7099-038-H		
J-3	Torque Gauge Adaptor	H-7099-035-H		
J-4	0.93 mm Torque Gauge	H-7099-039-H		
J-5	Hex. Wrench	H-7099-202-H		
J-6	Torque Measurement Cassette VHT-063S	J-6082-011-A		For FWD & back tension torque measurement.
	Torque Measurement Cassette VHT-404S	J-6082-012-A		For CUE and review torque measurement.
J-7	Alignment Tape JVC-MH-1 (NTSC) 24HASF-2 (NTSC Hi-Fi) JVC-MH-2 (PAL) JVC-MH-4 (SECAM)	 H-7099-046-H H-7099-153-H H-7099-052-H H-7099-053-H		
J-8	Cleaning Fluid	Y-2031-001-0	———	
J-9	Chamois Leather	2-034-697-00	———	
J-10	Head Demagnetizer	Widely available	———	Demagnetize video heads and audio heads.
J-11	Dental Mirror (With handle) Dental Mirror (Mirror)	J-6080-029-A J-6080-030-1	SL-5052	Tape path and tape traveling adjustments or checks.
J-12	FLOIL SG-055G	7-651-000-09		
J-13	Diamond Oil NT-68	7-661-018-18		
J-14	Screw Lock G (1401B)	7-432-114-11		

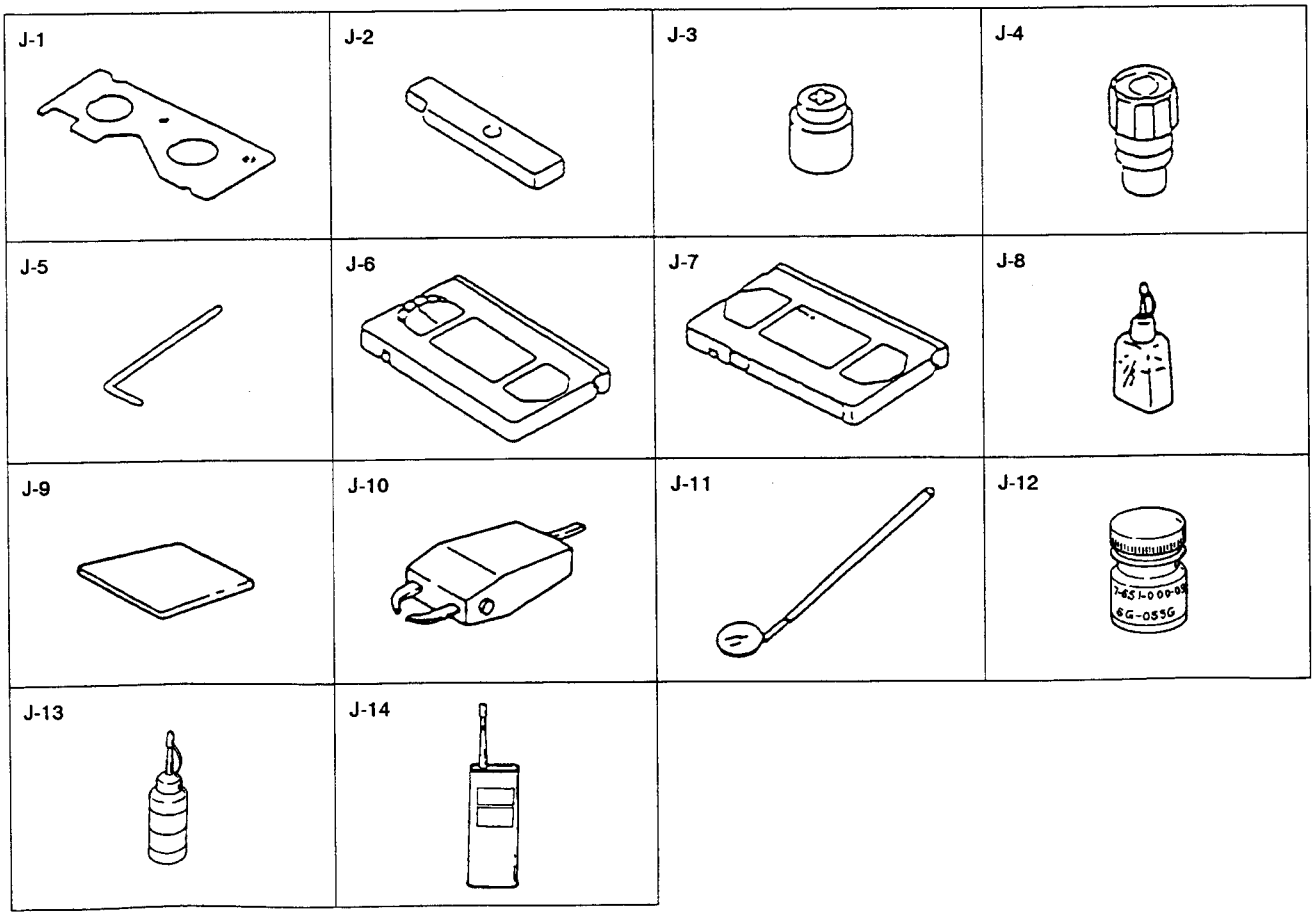

3. MAINLY MECHANICAL PARTS REPLACEMENT

Notes:

- Refer to the service manual, "DISASSEMBLY" for removal of the cabinet and boards.
- On mounting, while referring to notes on mounting perform reversely in the removal order.
- When replacing greased parts, grease them in the same way.
- Do not oil, grease or touch with bare hands the surfaces contacts tape of guides and brake shoes.
- Install gears to engage each other.
- Basically, disassembling and assembling should be done in the unthreading-end condition.

3-1. FL BLOCK ASSEMBLY (Fig. 3-1)

1) Remove screws ①.
2) Remove FL block assembly ② in the arrow Ⓐ direction.

Note: Be careful not to damage claws on the bottom and front.

[Note on Mounting]

- First insert claws on the bottom and front not to damage.
- Engage FL slide plate to FL driving gear with slightly sliding FL slide plate. (Fig. A)
- Keep clean top sensor and end sensor luminous plates. (Refer to 1-3.)

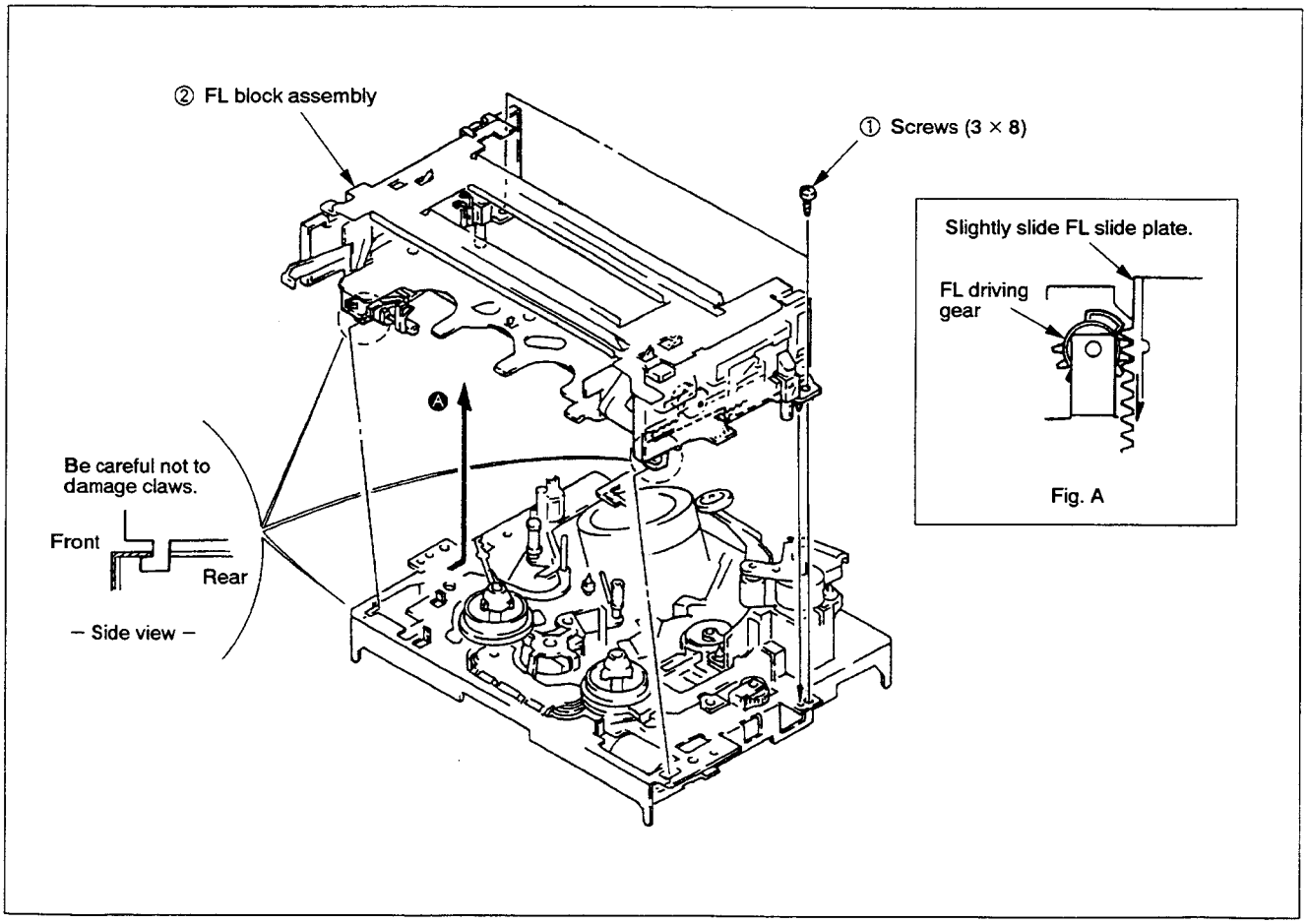

Fig. 3-1

3-2. DRUM ASSEMBLY (Fig. 3-2)

1) Remove screw ①.
2) Remove ground shaft assembly ② not to touch its tip with bare hand or tools.
3) Remove screws ③ to remove drum assembly ④.

[Note on Mounting]

- Don't touch head chips ⑤ and ground shaft assembly ④ with bare hand or tools.
- Keep clean the surface contacts tape of drum assembly ④.

[Adjustment after Mounting]

- 4-1. Tape path adjustment.

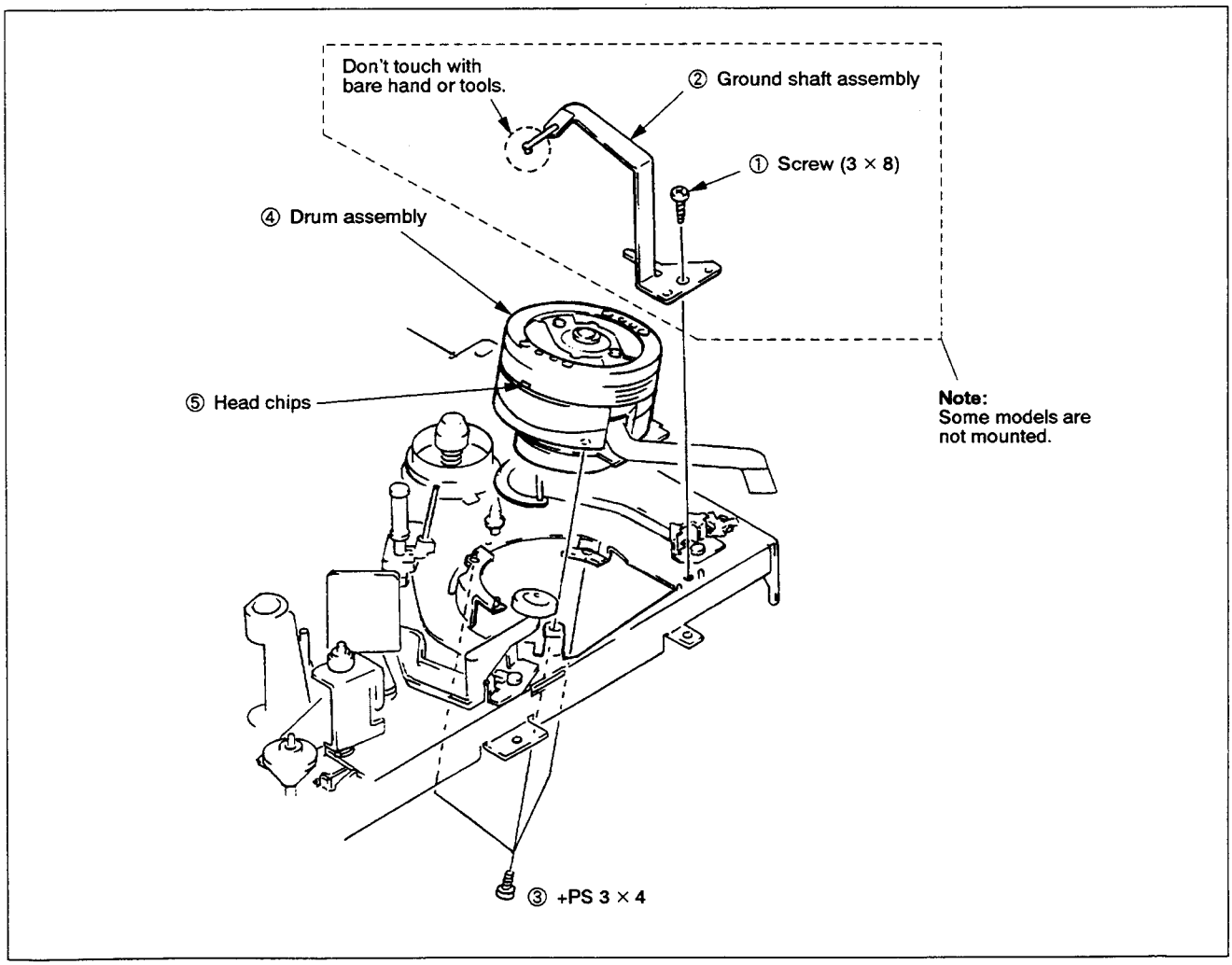

Fig. 3-2

3-3. TIMING BELT (Fig. 3-3)

1) Remove screw ① to remove tension vehicle arm assembly ②.
2) Remove timing belt ③.

[Note on Mounting]

- Tighten screw ① while pressing tension vehicle arm in the arrow Ⓐ direction.

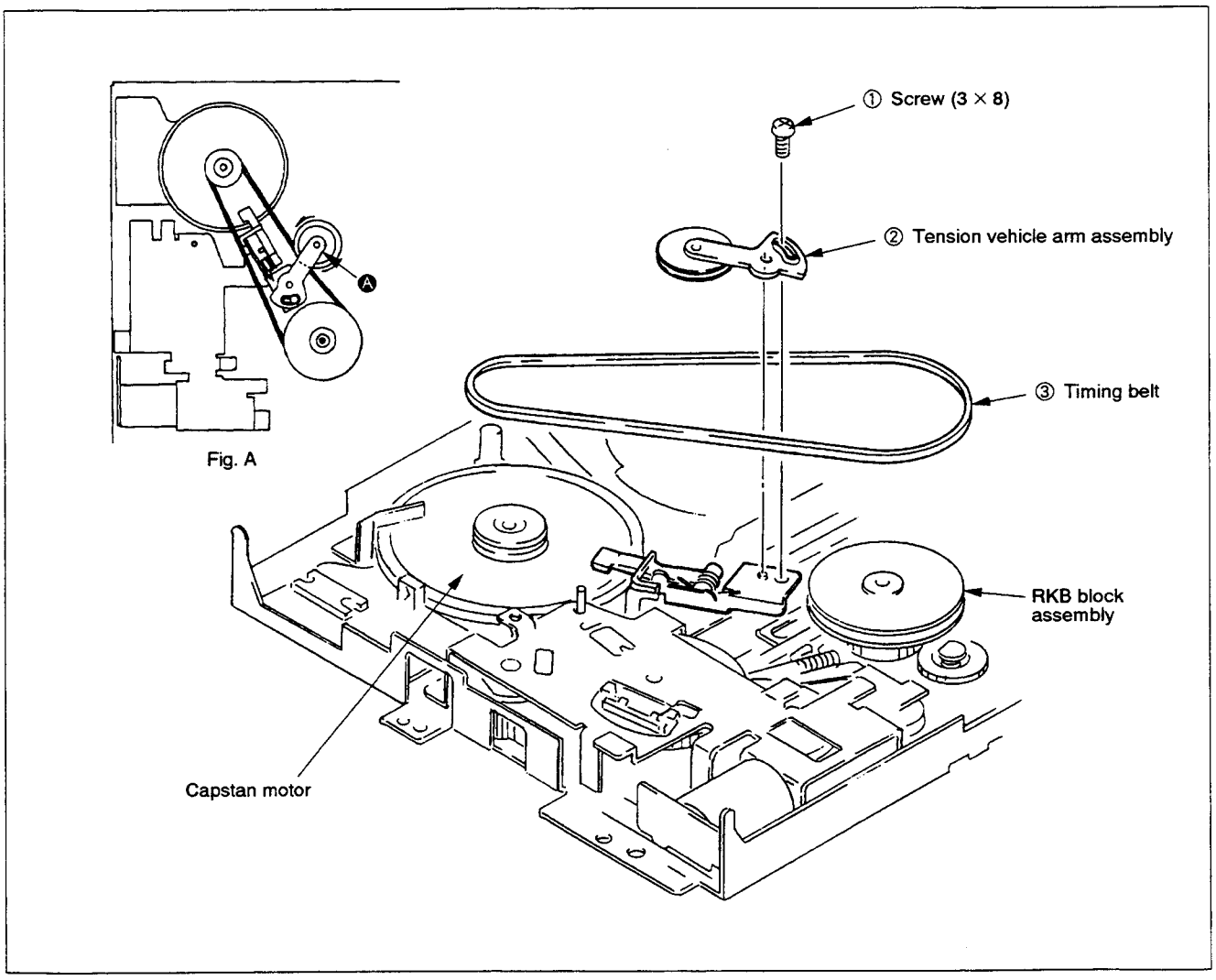

Fig. 3-3

3-4. CAP BRAKE ASSEMBLY (Fig. 3-4)

1) Remove tension vehicle arm assembly. (Refer to 3-3)
2) Remove torsion coil spring ① from portion Ⓐ to remove CAP brake assembly.

[Note on Mounting]

- Mount torsion coil spring ① to CAP brake assembly ② in the order Ⓐ and Ⓑ. (Fig. A)
- Put the fulcrum of CAP brake assembly ② to CAP brake shaft ③ and the tip of torsion coil spring to Ⓒ.
- Don't touch brake shoe Ⓓ with bare hand.

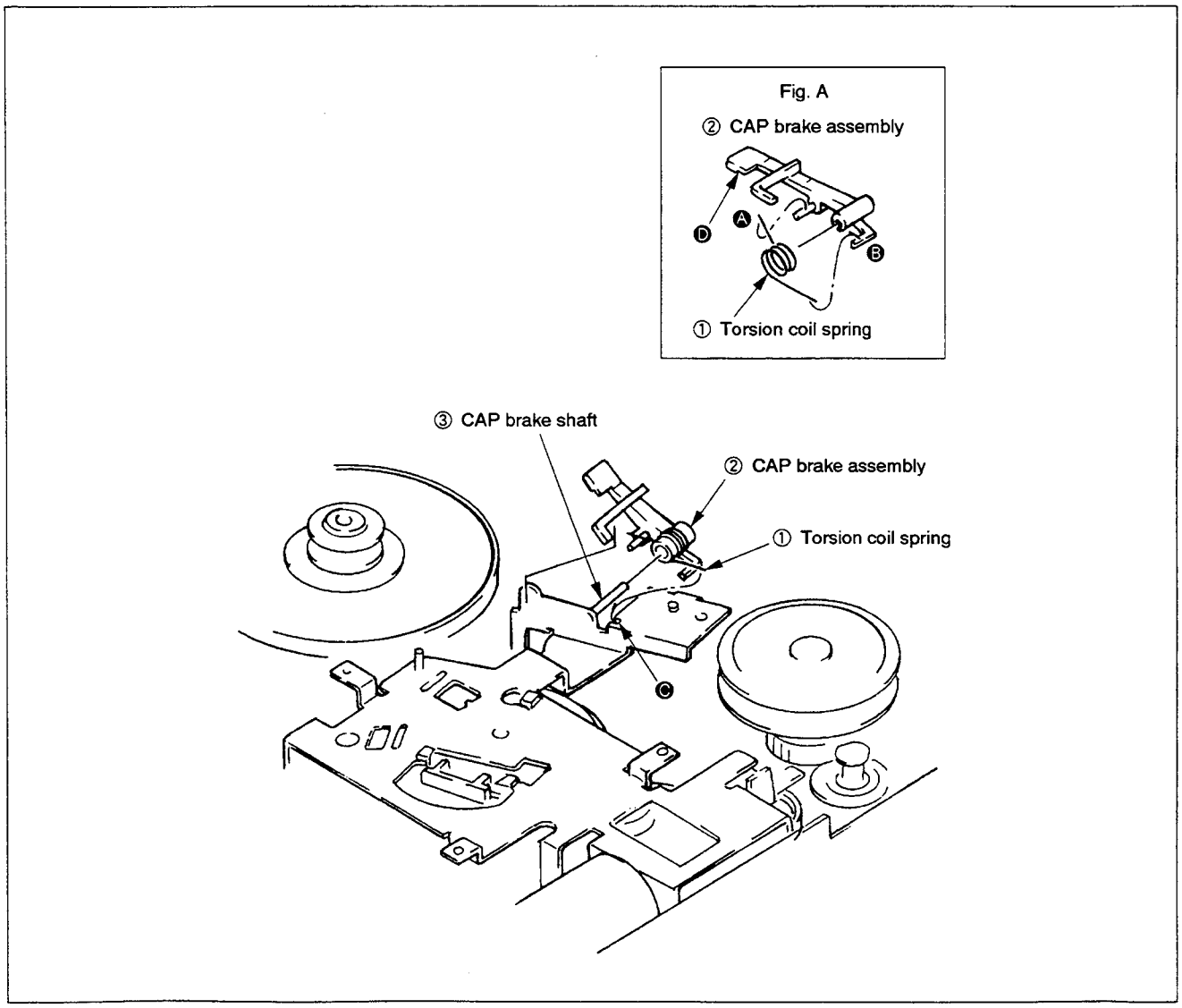

Fig. 3-4

3-5. TG2 ROLLER, FE HEAD ASSEMBLY (Fig. 3-5)

1) Remove claw Ⓐ to pull out TG2 roller ①.
2) Remove screw ② to pull out FE head assembly.

[Note on Mounting]

- Keep clean the surface contacts tape of TG2 roller ①.

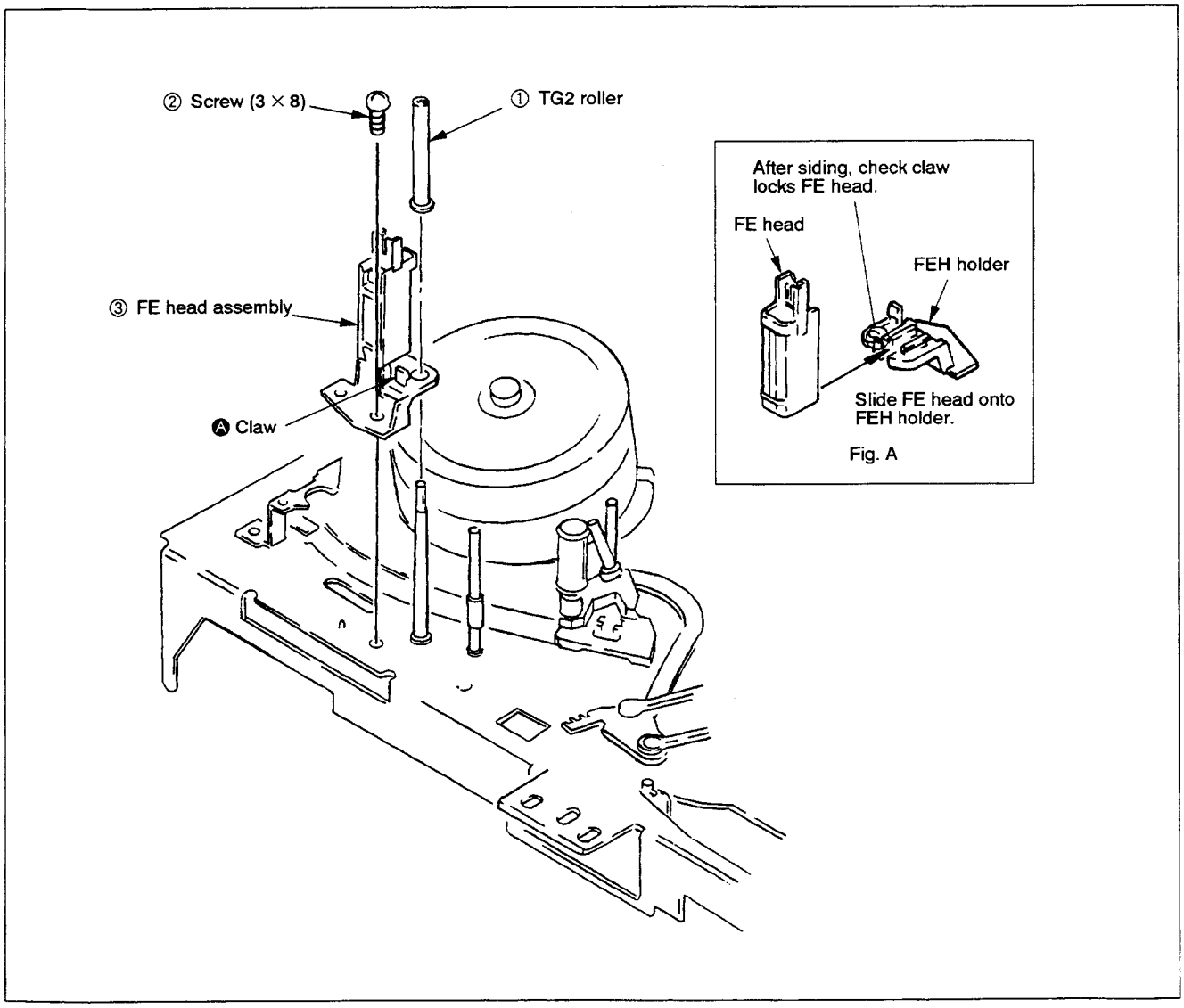

Fig. 3-5

3-6. PINCH PRESS BLOCK ASSEMBLY, ELEVATOR GEAR (Fig. 3-6)

1) Remove E ring ① to pull out pinch press block assembly ②.
2) Remove lid opener ③ by pressing claw Ⓐ in the arrow Ⓑ direction.
3) Pull out elevator gear ④.

[Note on Mounting]

- Apply grease FLOIL SG-055G (Jig Ref. No. J-12) to ☆ marked portions.
- Be sure to match the phase Ⓒ between elevator gear ④ and press gear ⑤ on mounting elevator gear ④.

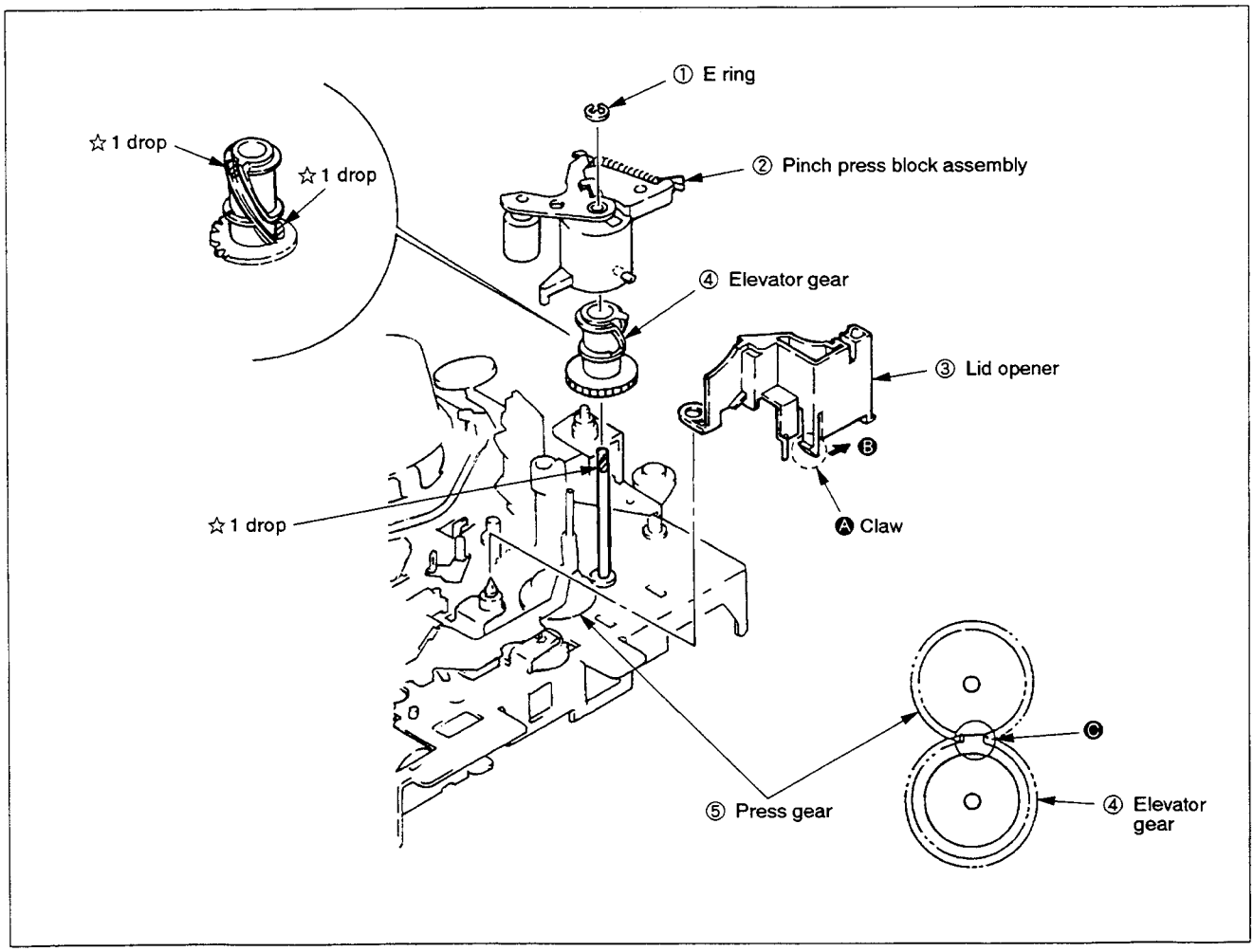

Fig. 3-6

3-7. ACE BLOCK ASSEMBLY (Fig. 3-7)

1) Move torsion coil spring (ACE) ① in the arrow Ⓐ direction.
2) Remove ACE adjustment screw ②.
3) Remove AC height adjustment nut ③ to pull out ACE block assembly ④.

[Note on Mounting]

- Keep clean the surface contacts tape of ACE block assembly ④.
- Be sure to hang torsion coil spring (ACE) ① in the arrow Ⓑ direction.
- Set ACE adjustment screw ② to the height as shown in Fig. A.

[Adjustment after Mounting]

- 4-1. Tape path adjustment.
- After adjustment apply Screw Lock G (1401B) (Jig Ref. No. J-14) at ☆ marked portion.

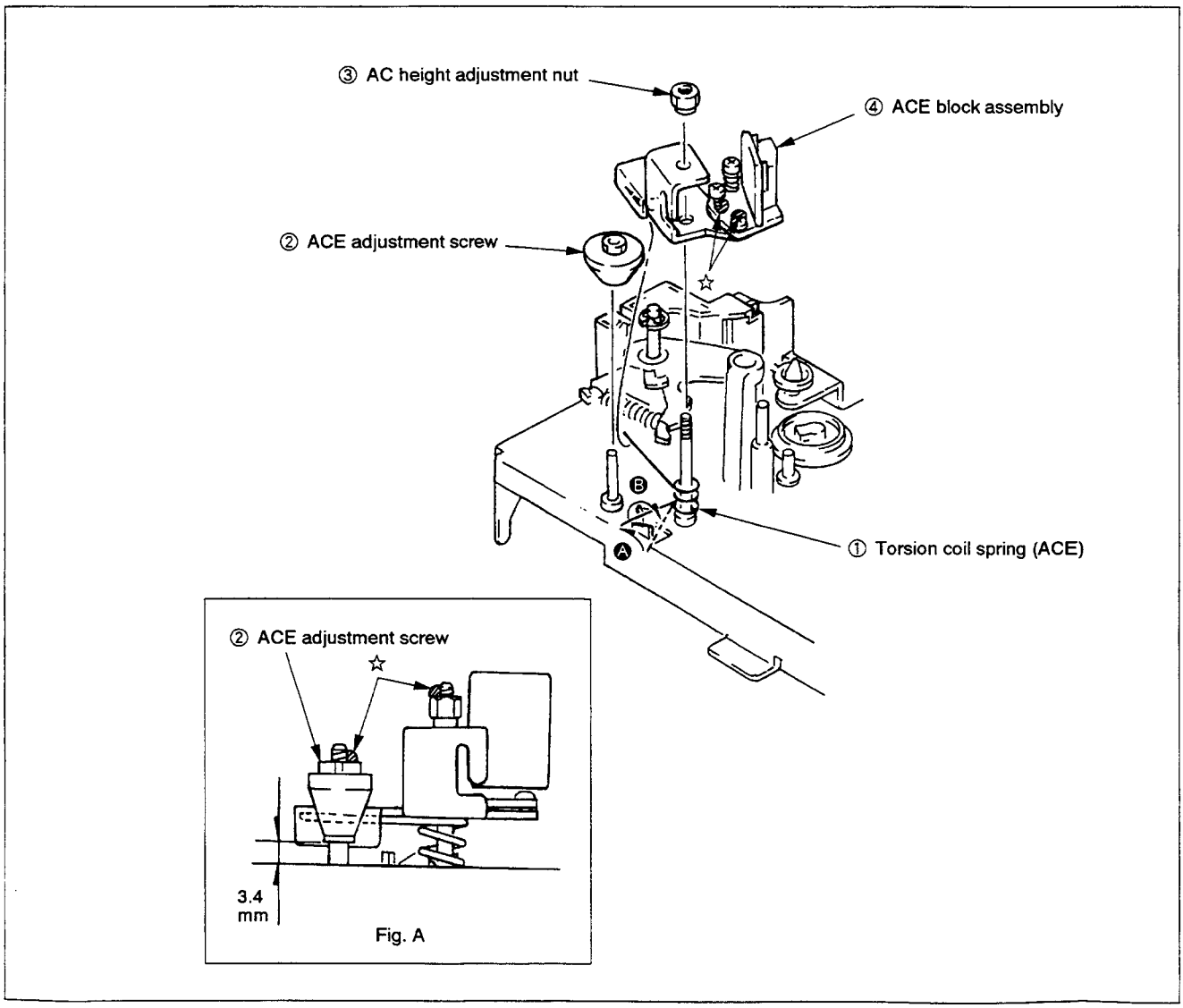

Fig. 3-7

3-8. TG3, TG6 GUIDE ROLLER ASSEMBLIES (Fig. 3-8)

1) Loosen screw ① and pull out. TG3 guide roller assembly ② by turning it in the arrow Ⓐ direction.
2) Loosen screw ③ and pull out TG6 guide roller assembly ④ by turning it in the arrow Ⓑ direction.

[Note on Mounting]

- Keep clean the surface contacts tape of TG3 and TG6 guide roller assemblies ②, ④.

[Adjustment after Mounting]

- 4-1. Tape path adjustment.

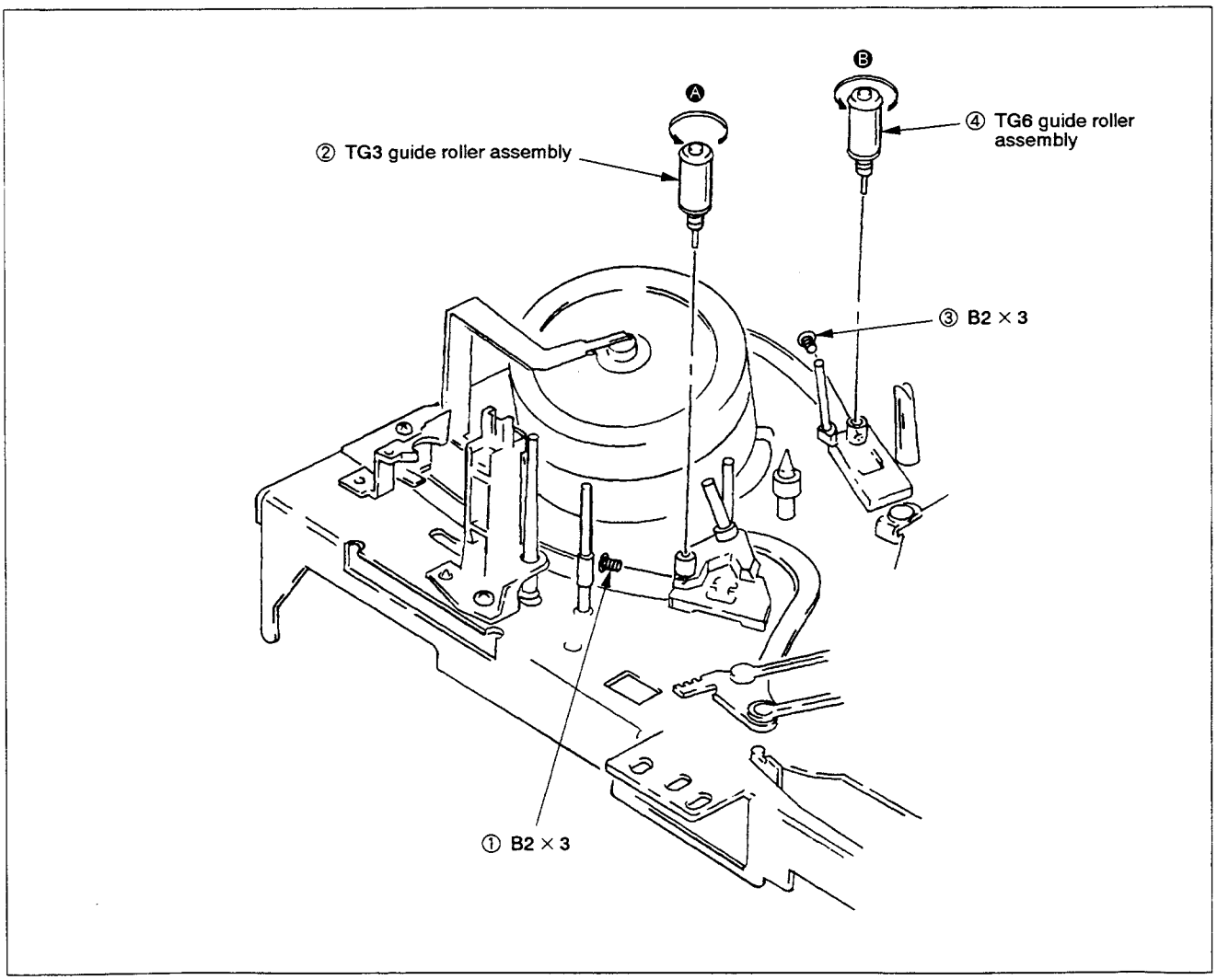

Fig. 3-8

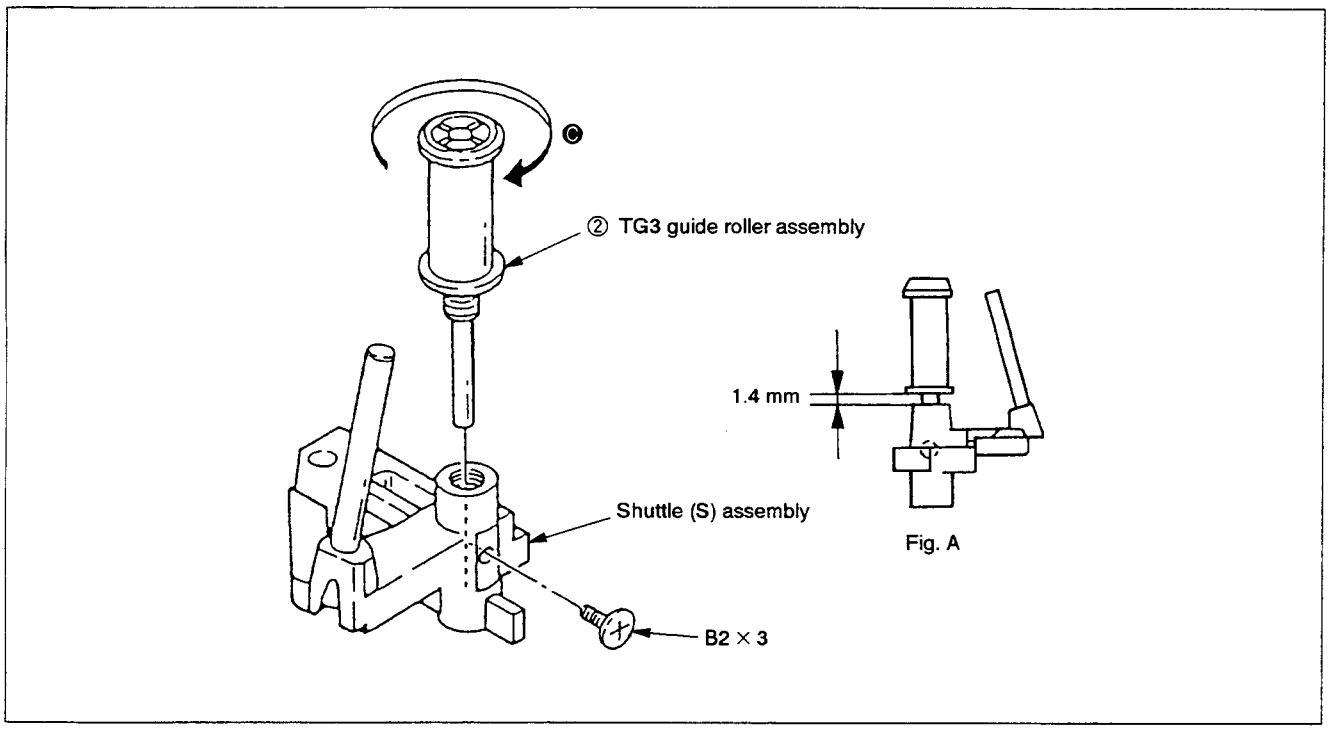

Fig. 3-9

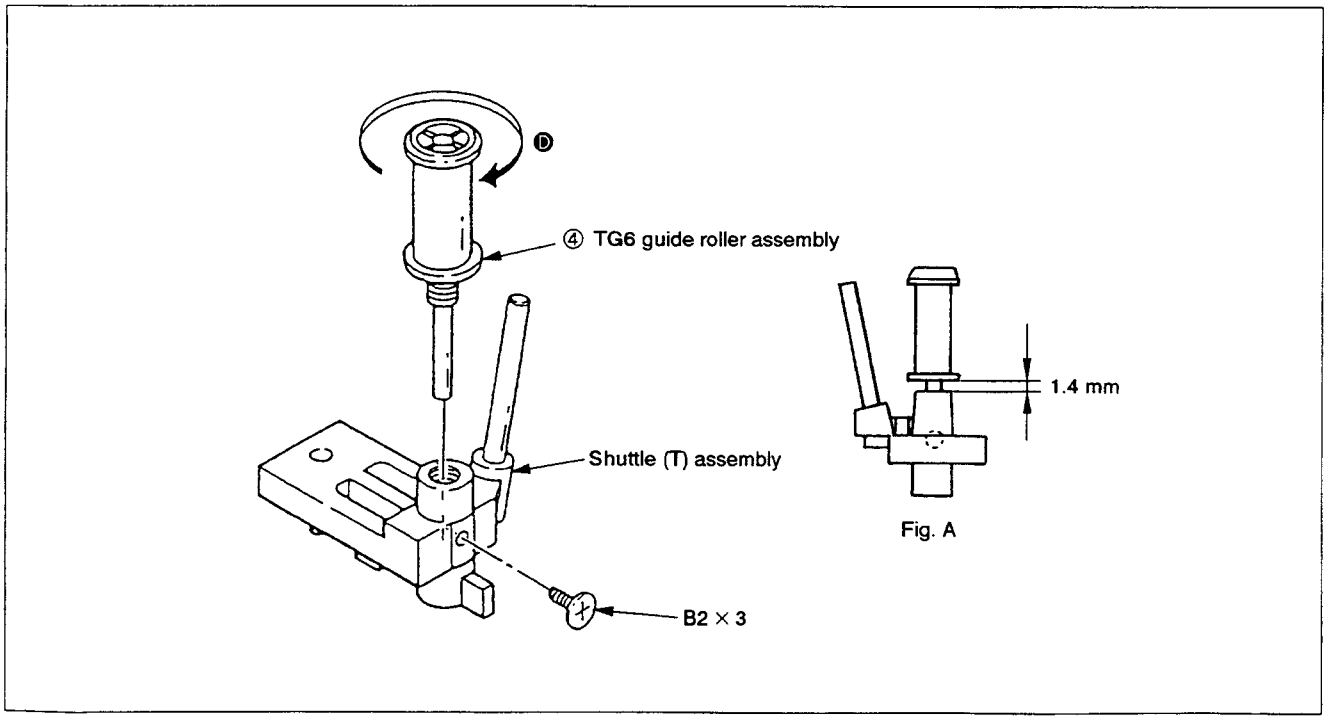

Fig. 3-10

3-9. CAPSTAN MOTOR (Fig. 3-11)

1) Remove timing belt. (Refer to 3-3.)
2) Remove CAP brake assembly. (Refer to 3-4.)
3) Remove screws ① to pull out capstan motor ②.

[Note on Mounting]

- Keep clean the surface contacts tape of capstan motor ②.
- On tightening screws ①, first tighten screw A temporarily, next tighten screws in the order B to C to A.

[Adjustment after Mounting]

- 4-1. Tape path adjustment.

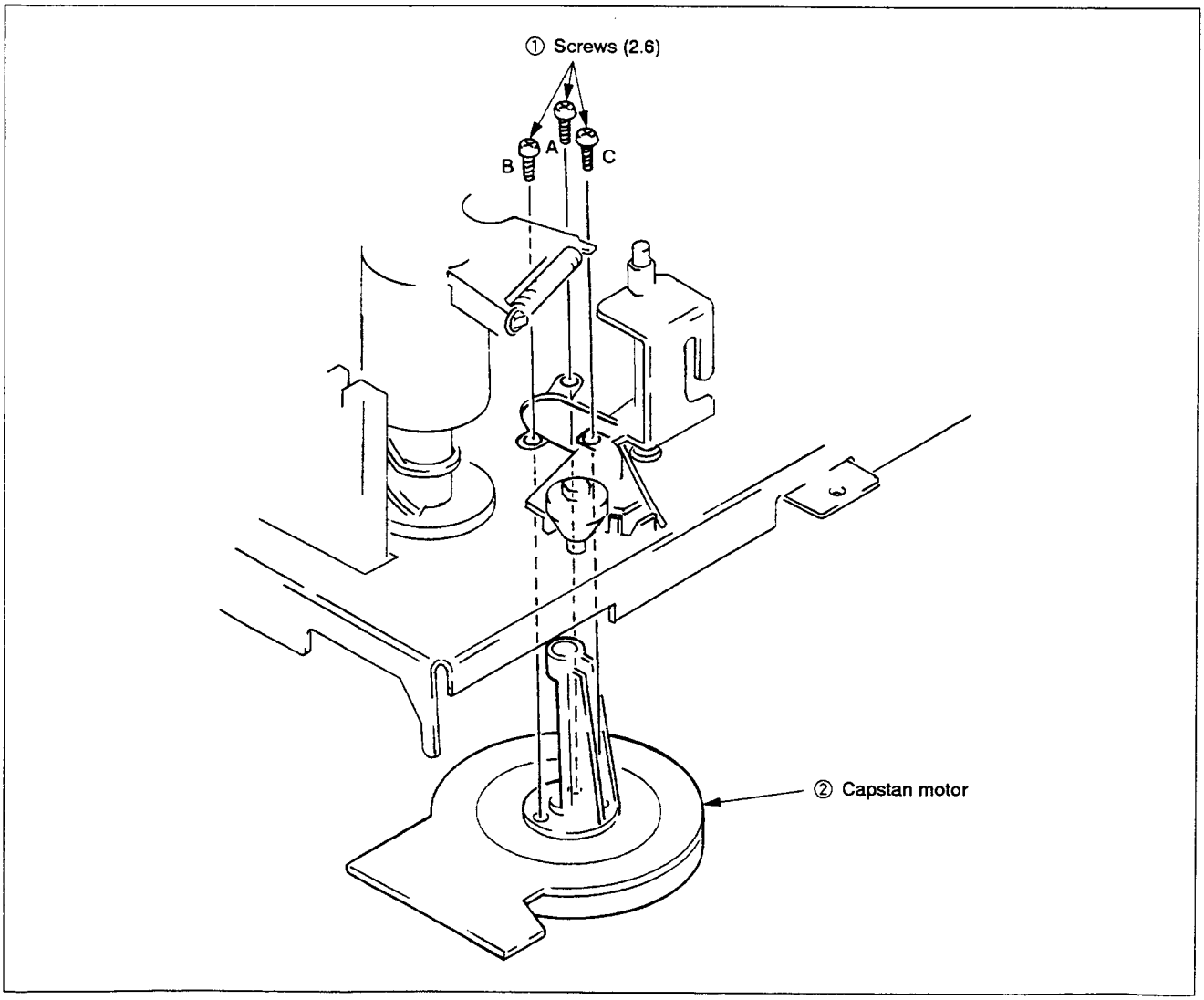

Fig. 3-11

3-10. MAIN BRAKE ASSEMBLIES S AND T (Fig. 3-12)

1) Remove tension spring ①.
2) Remove stopper washer (2) ② to remove neutrality arm ③.
3) Remove pendulum compulsion arm ④ and tension coil spring ⑤.
4) Remove stopper washer (2) ⑥ to remove main brake S assembly ⑦.
5) Remove stopper washer (2) ⑧ to remove main brake T assembly ⑨.

[Note on Mounting]

- Don't touch brake shoes Ⓐ and Ⓑ with bare hand.
- Apply FLOIL FG-055G (Jig Ref. No. J-12) to ☆ marked portions.

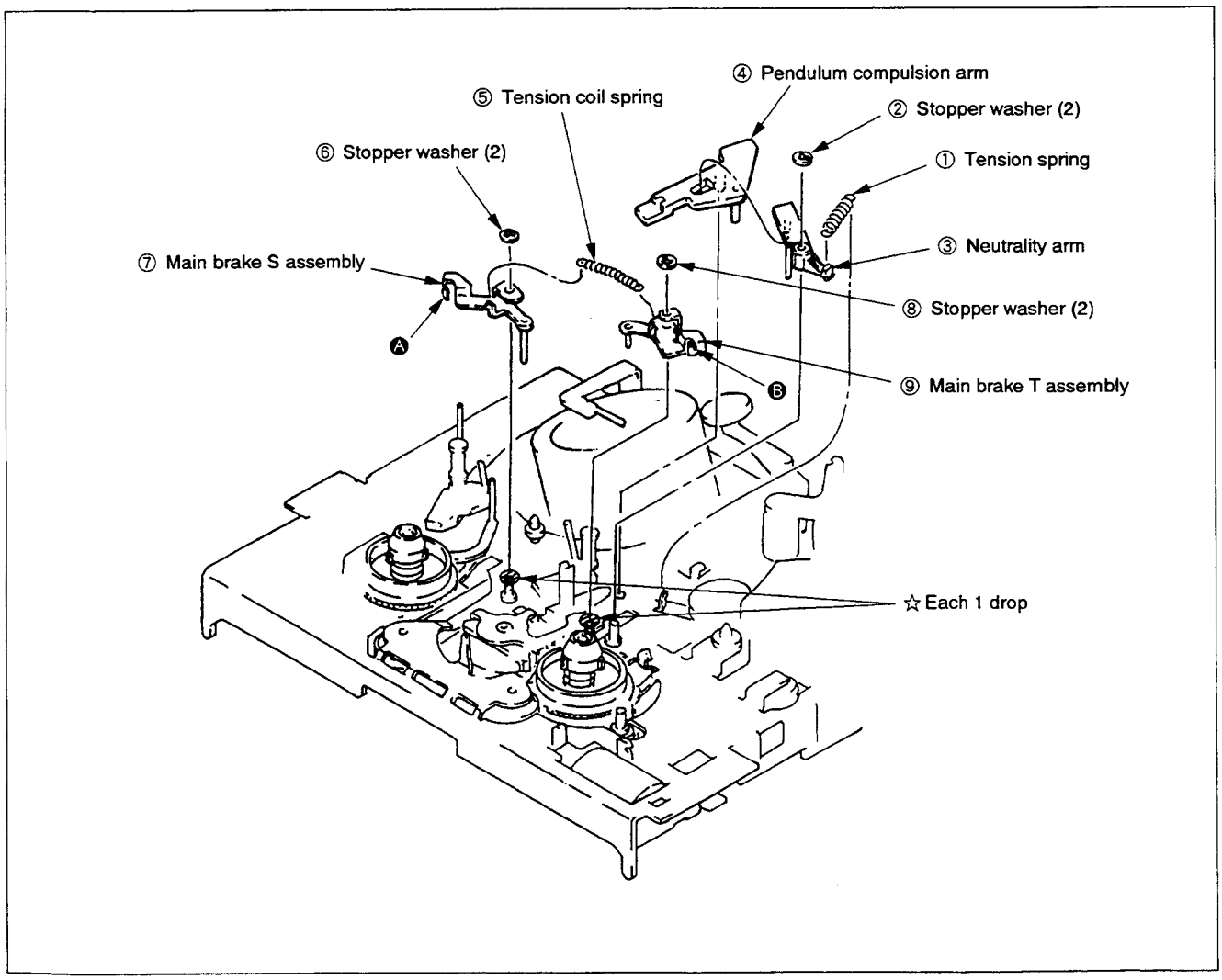

Fig. 3-12

3-11. SOFT BRAKE T ASSEMBLY (Fig. 3-13)

1) Remove pinch press block assembly. (Refer to 3-6.)
2) Remove lid opener ① carefully not to damage claw Ⓐ.
3) Remove tension spring ② from side Ⓑ to pull out soft brake T assembly ③.

[Note on Mounting]

- Don't touch brake shoes Ⓒ with bare hand.

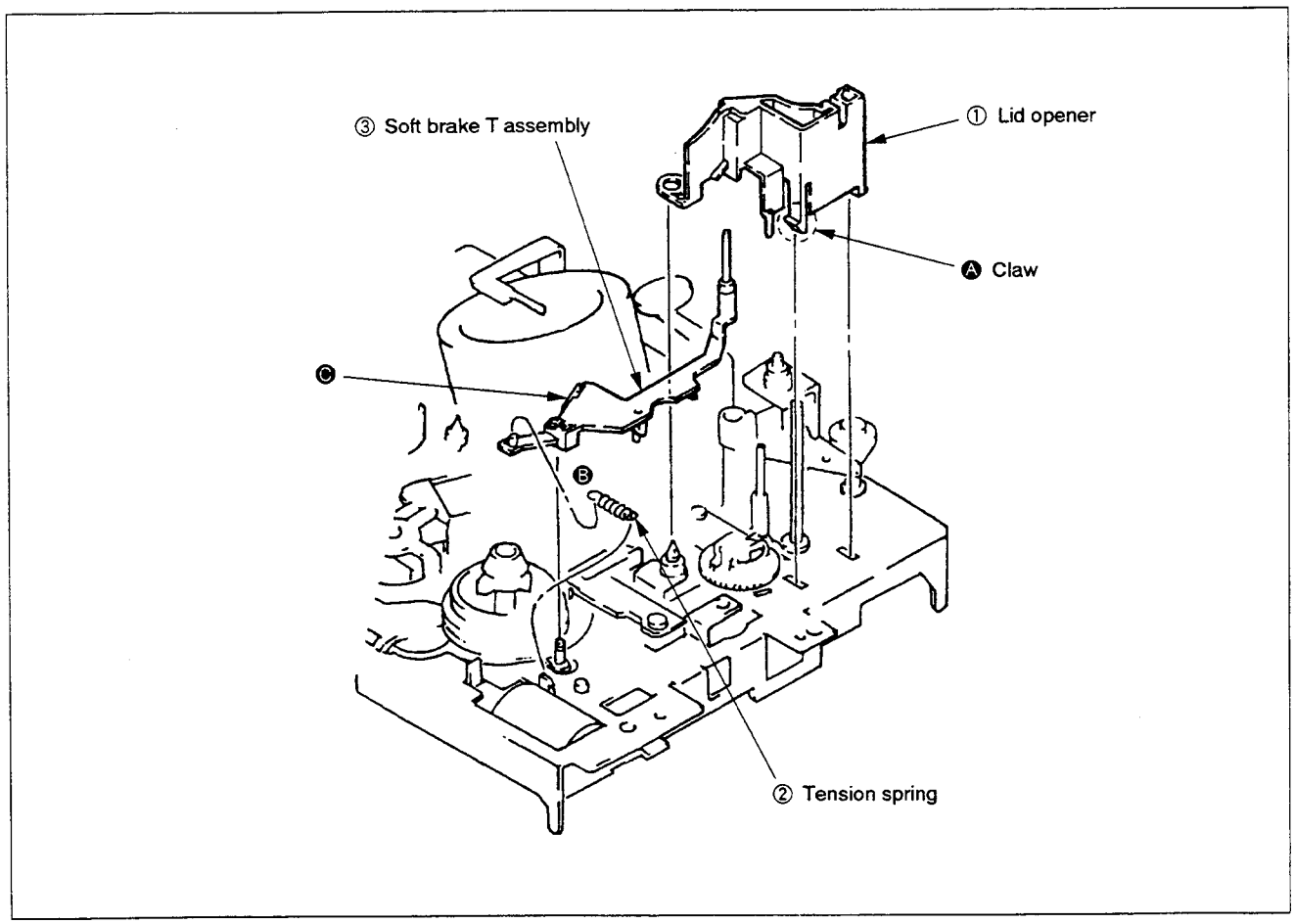

Fig. 3-13

3-12. RVS BRAKE ARM ASSEMBLY, REEL TABLE (T) ASSEMBLY (Fig. 3-14)

1) Remove main brake T assembly. (Refer to 3-10.)
2) Remove soft brake T assembly. (Refer to 3-11.)
3) Remove tension coil spring ① in the order Ⓐ to Ⓑ.
4) Remove RVS brake arm assembly ②.
5) Remove stopper washer (2) ③ to pull out reel table (T) assembly ④.

[Note on Mounting]

- Apply one drop of Diamond Oil NT-68 (Jig Ref. No. J-13) to ☆ marked portion before mounting reel table (T) assembly ④. (Fig. A)
- Don't touch the hatched portion on reel table (T) assembly ④ and brake shoe Ⓒ of RVS brake arm assembly ② with bare hand.

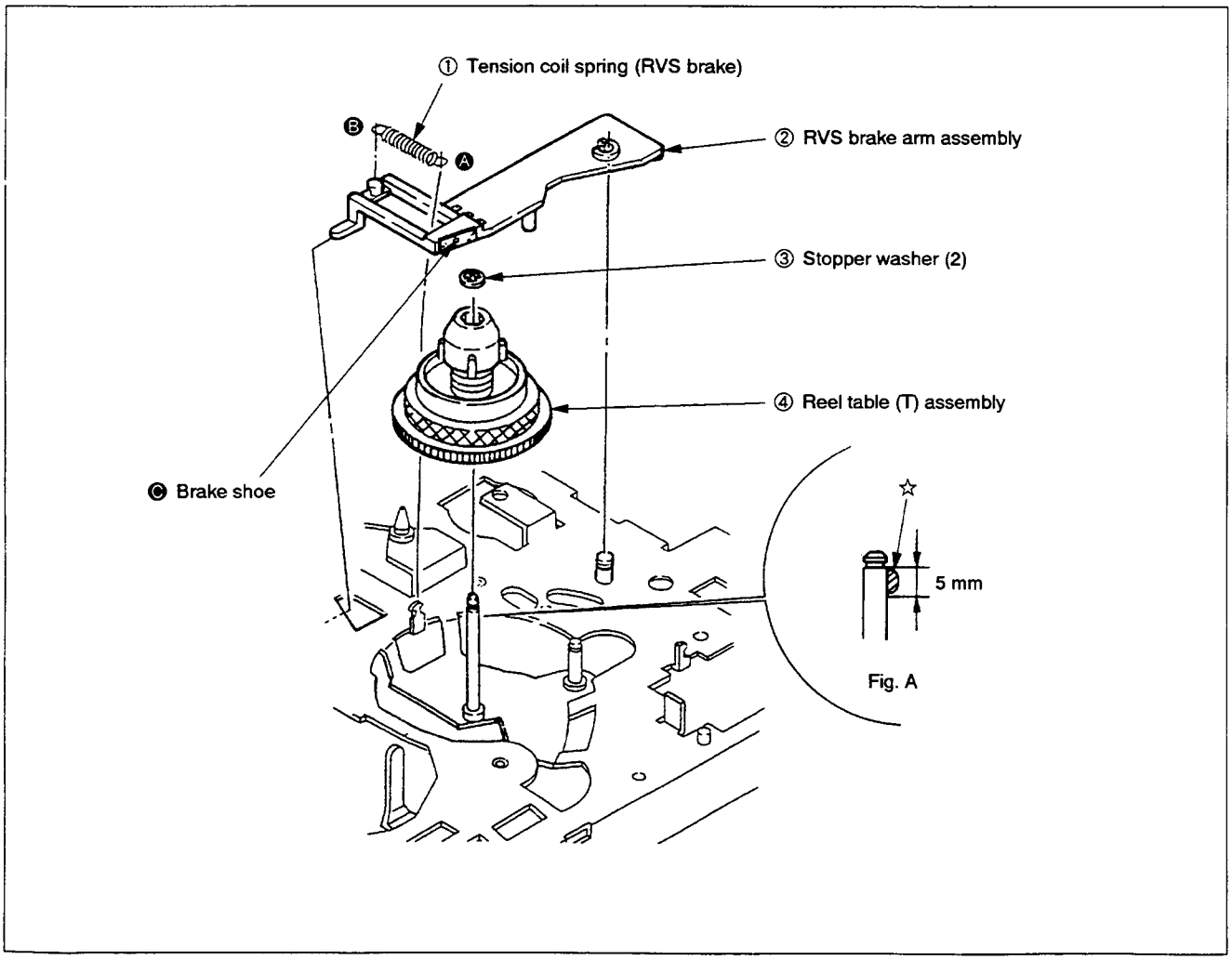

Fig. 3-14

3-13. TG8 ASSEMBLY (Fig. 3-15)

1) Remove TG8 retainer ① to pull out TG8 assembly ②.

[Note on Mounting]

- Apply FLOIL SG-055G (Jig Ref. No. J-12) to ☆ marked portion.
- Keep clean the surface contacts tape of TG8 assembly ②.
- Be careful not to change the shape of TG8 retainer ①.

[Adjustment after Mounting]

- 4-1. Tape path adjustment.

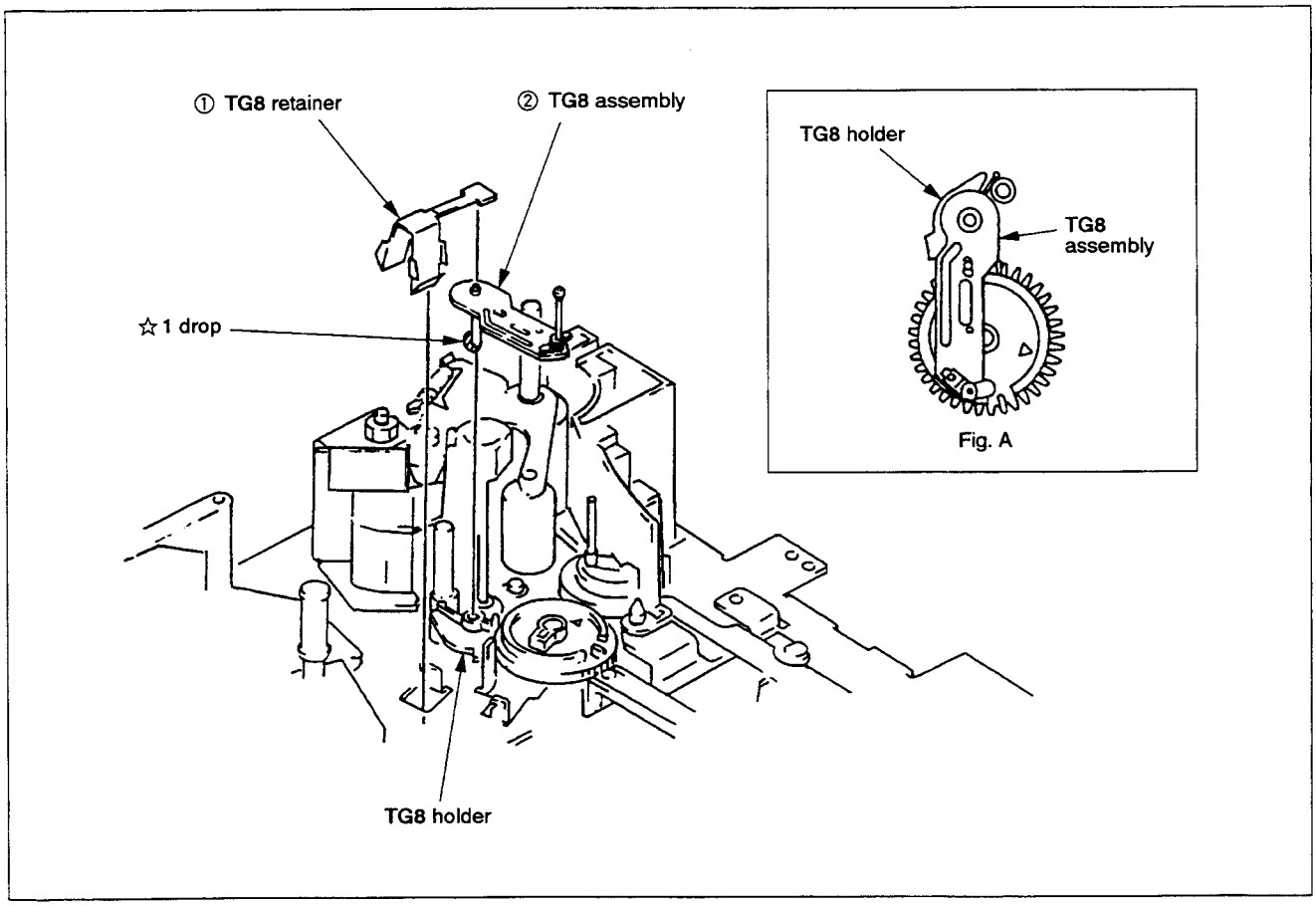

Fig. 3-15

3-14. TG8 HOLDER (Fig. 3-16)

1) Remove TG8 assembly. (Refer to 3-13)
2) Pull out TG8 holder ①.

[Note on Mounting]

- Be careful about the direction of TG8 holder ①. (Ⓐ of Fig. A)

[Adjustment after Mounting]

- 4-1. Tape path adjustment.

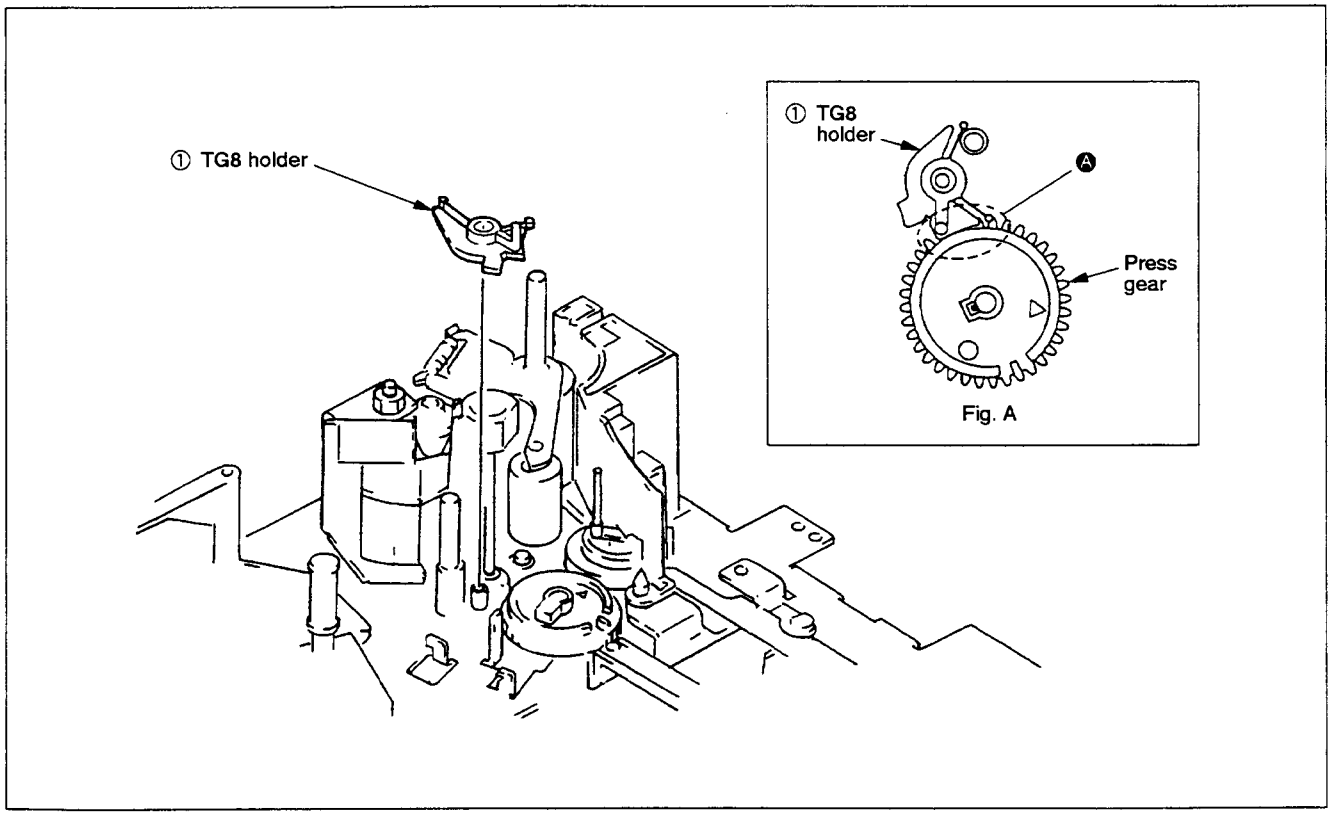

Fig. 3-16

3-15. TG8 AND PRESS GEARS (Fig. 3-17)

1) Remove pinch press block assembly. (Refer to 3-6.)
2) Remove soft brake T assembly. (Refer to 3-11.)
3) Remove TG8 assembly. (Refer to 3-13.)
4) Remove TG8 holder. (Refer to 3-14.)
5) Pull out TG8 gear ① or press gear ②.

[Note on Mounting]

- Adjust the holes on gears to the holes on chassis. (Fig. A)
- Adjust the arrows carved on gears each other. (Fig. A)

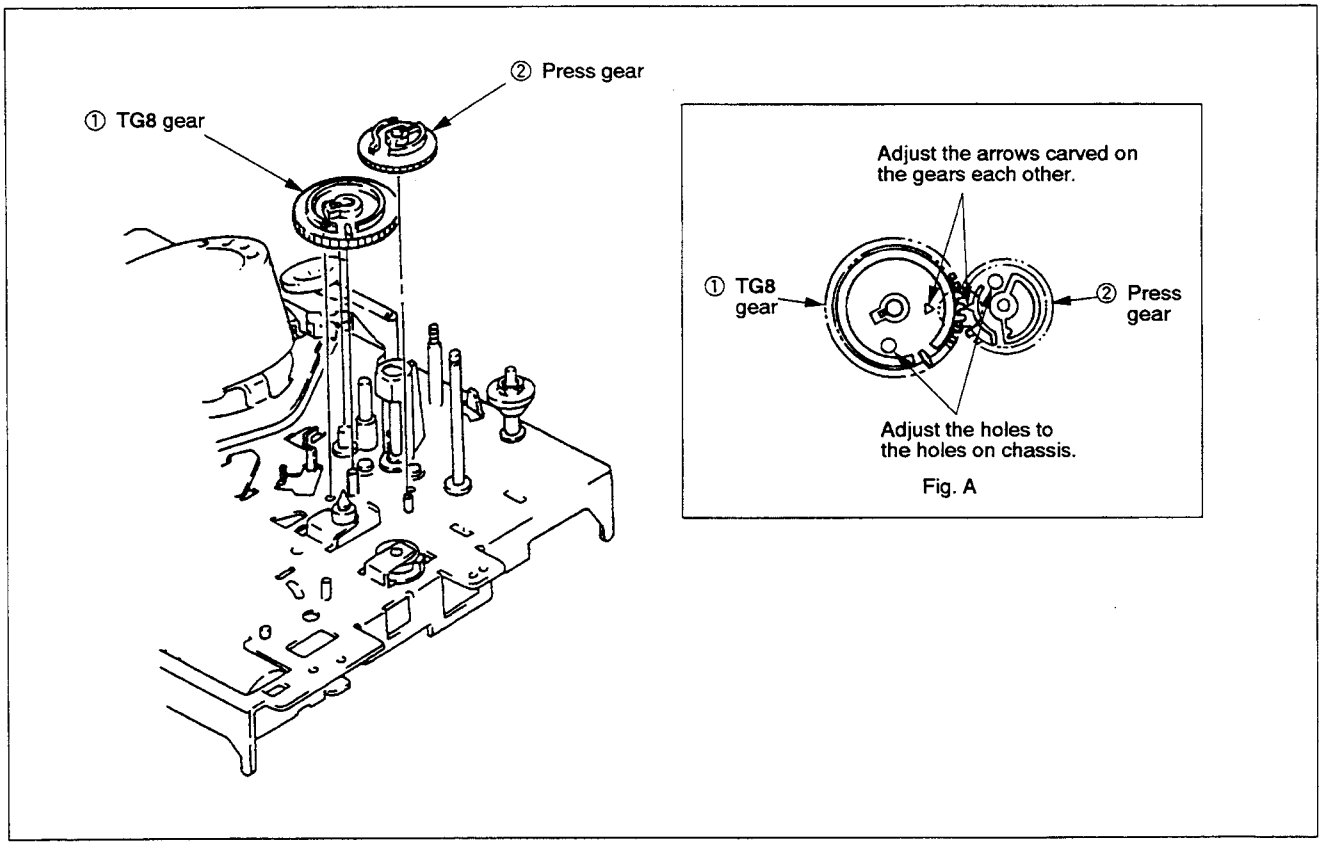

Fig. 3-17

3-16. CAM MOTOR CHASSIS BLOCK ASSEMBLY, UPPER/LOWER COMMUNICATION GEAR (Fig. 3-18)

1) Remove timing belt. (Refer to 3-3.)
2) Remove CAP brake assembly. (Refer to 3-4.)
3) Remove screws ① to remove cam motor chassis assembly ②.
4) Pull out upper/lower communication gear ③.

[Note on Mounting]

- First, check main slider ④ slides fully in the arrow Ⓔ direction.
- Set rotary encoder switch position to "E" seen from the window of cam motor chassis. (Fig. A)
- Tighten screws ① in the order Ⓐ to Ⓑ to Ⓒ to Ⓓ.

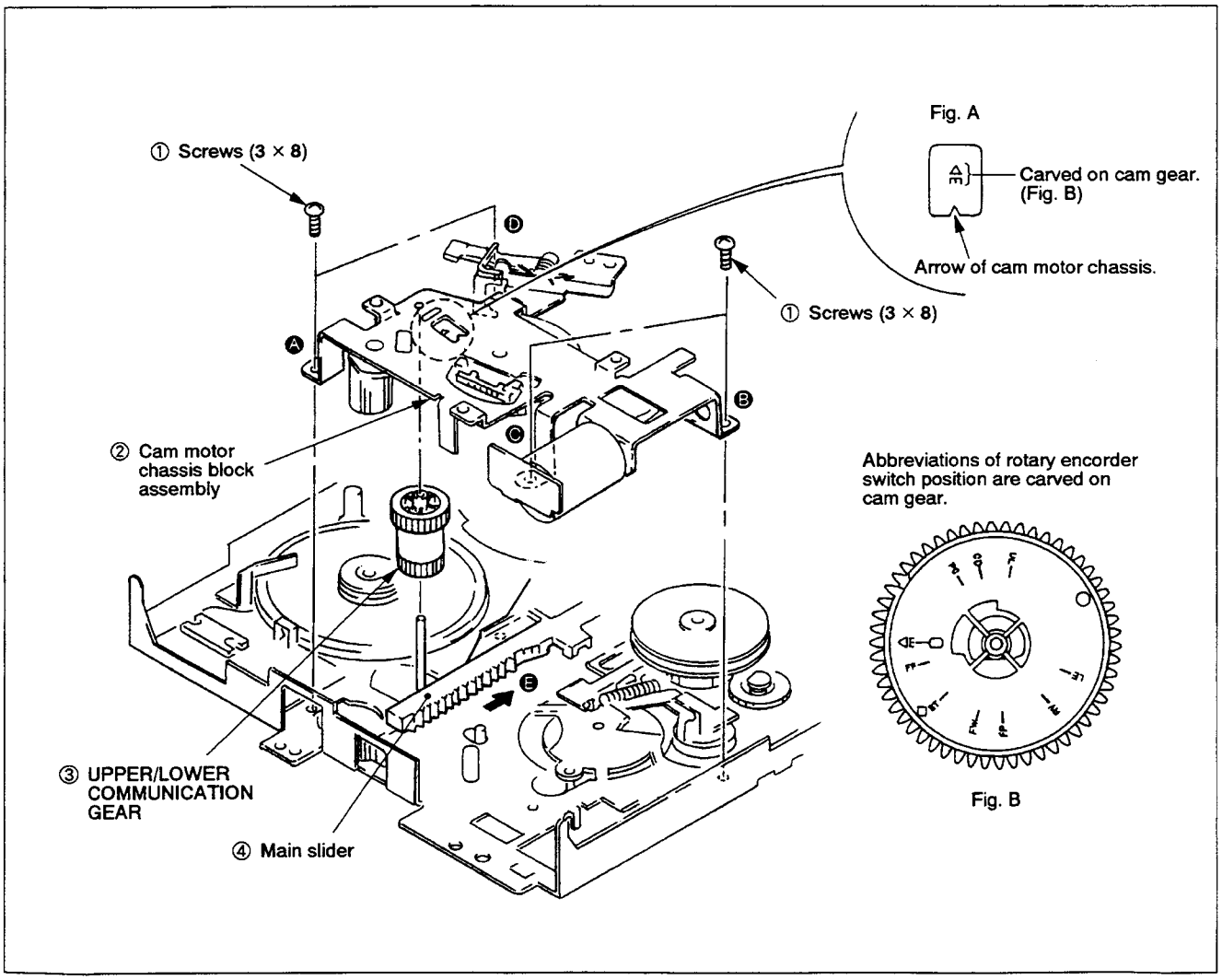

Fig. 3-18

3-17. ROTARY ENCODER SWITCH (Fig. 3-19)

1) Remove timing belt. (Refer to 3-3.)
2) Remove CAP brake assembly. (Refer to 3-4.)
3) Remove cam motor chassis block assembly (Refer to 3-15.) and turn upside on the bottom.
4) Remove stopper washer (2) ① to pull out worm wheel ②.
5) Remove stopper washer (2) ③ to pull out cam gear ④.
6) Pull out FL driving gear ⑤ and rotary encoder switch ⑥.

[Note on Mounting]

- Apply FLOIL SG-055G (Jig Ref. No. J-12) to ☆ marked portions. (Fig. 3-19, A)
- Adjust the hole Ⓐ to the hole on cam motor chassis. (Fig. B)
- Adjust the holes Ⓑ and Ⓒ to the hole on cam motor chassis. (Fig. C)

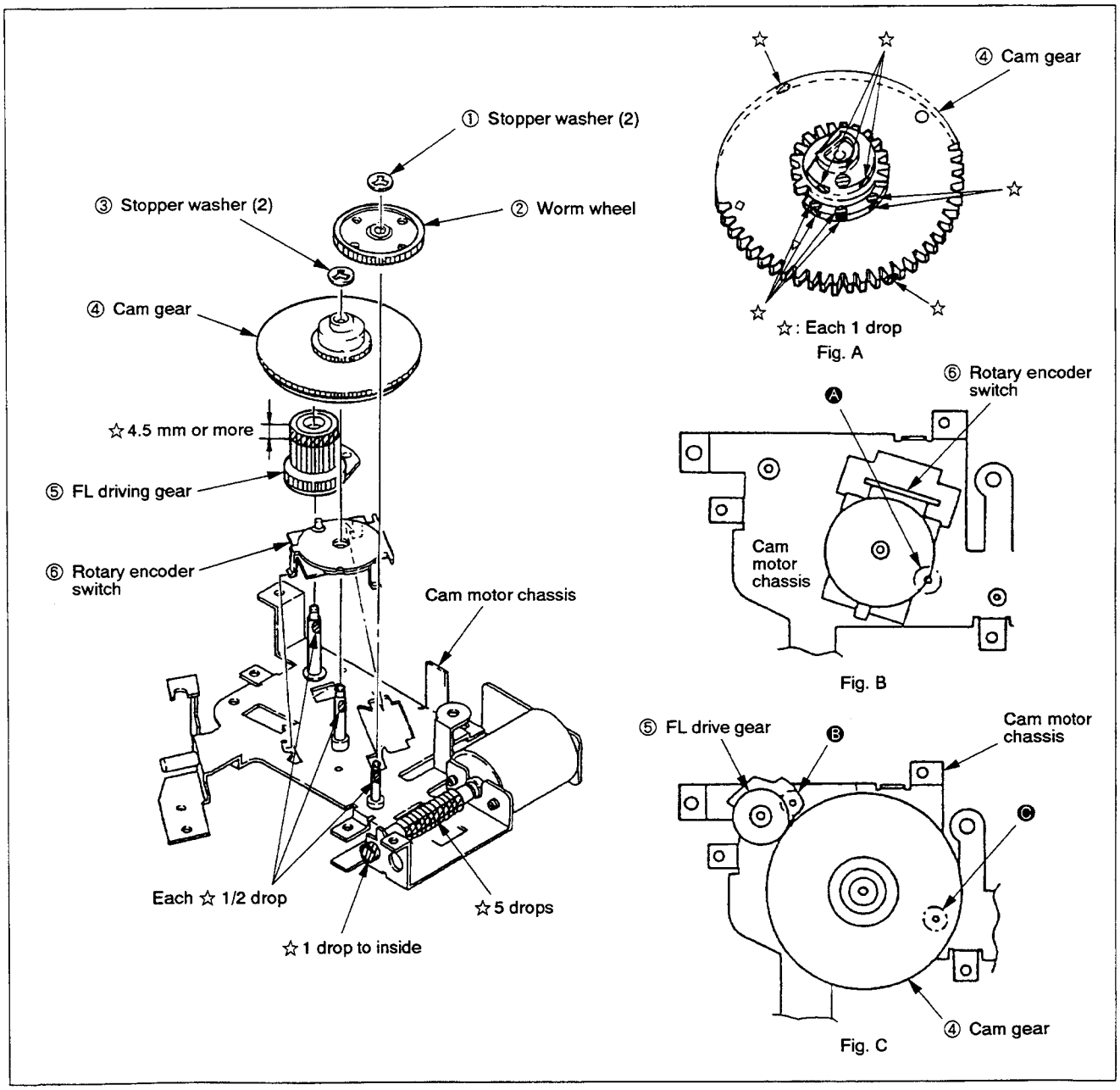

Fig. 3-19

3-18. MAIN SLIDER (Fig. 3-20)

1) Remove timing belt. (Refer to 3-3.)
2) Remove CAP brake assembly. (Refer to 3-4.)
3) Remove cam motor chassis block assembly. (Refer to 3-16.)
4) Remove screw ① to remove retainer ②.
5) Pull out main slider ③.

[Note on Mounting]

- Apply FLOIL SG-055G (Jig Ref. No. J-12) as shown in Fig. A.
- At the last, slide main slider fully in the arrow Ⓐ direction.

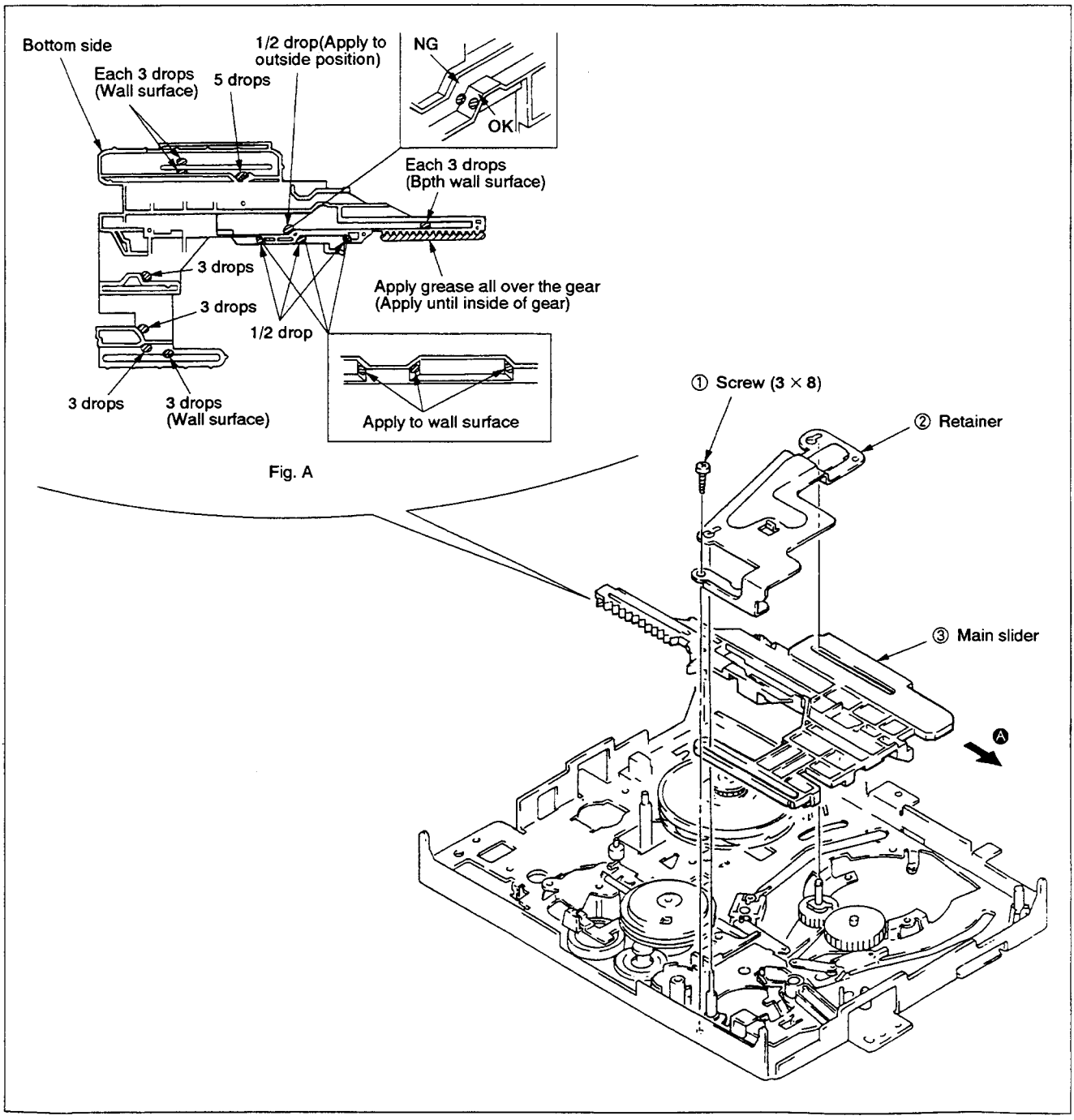

Fig. 3-20

3-19. SHUTTLE T BLOCK AND LOADING GEAR T BLOCK ASSEMBLIES (Fig. 3-21)

1) Remove timing belt. (Refer to 3-3.)
2) Remove CAP brake assembly. (Refer to 3-4.)
3) Remove cam motor chassis block assembly. (Refer to 3-16.)
4) Remove main slider. (Refer to 3-18.)
5) Remove screw ① to remove loading leaf (T) spring ② and shuttle T block assembly ③.
6) Pull out loading gear T block assembly ④.

[Note on Mounting]

- Adjust the phase Ⓐ between loading gear (T) and loading gear (S). (Fig. A)
- Keep clean the surface contacts tape of shuttle T block assembly ③.

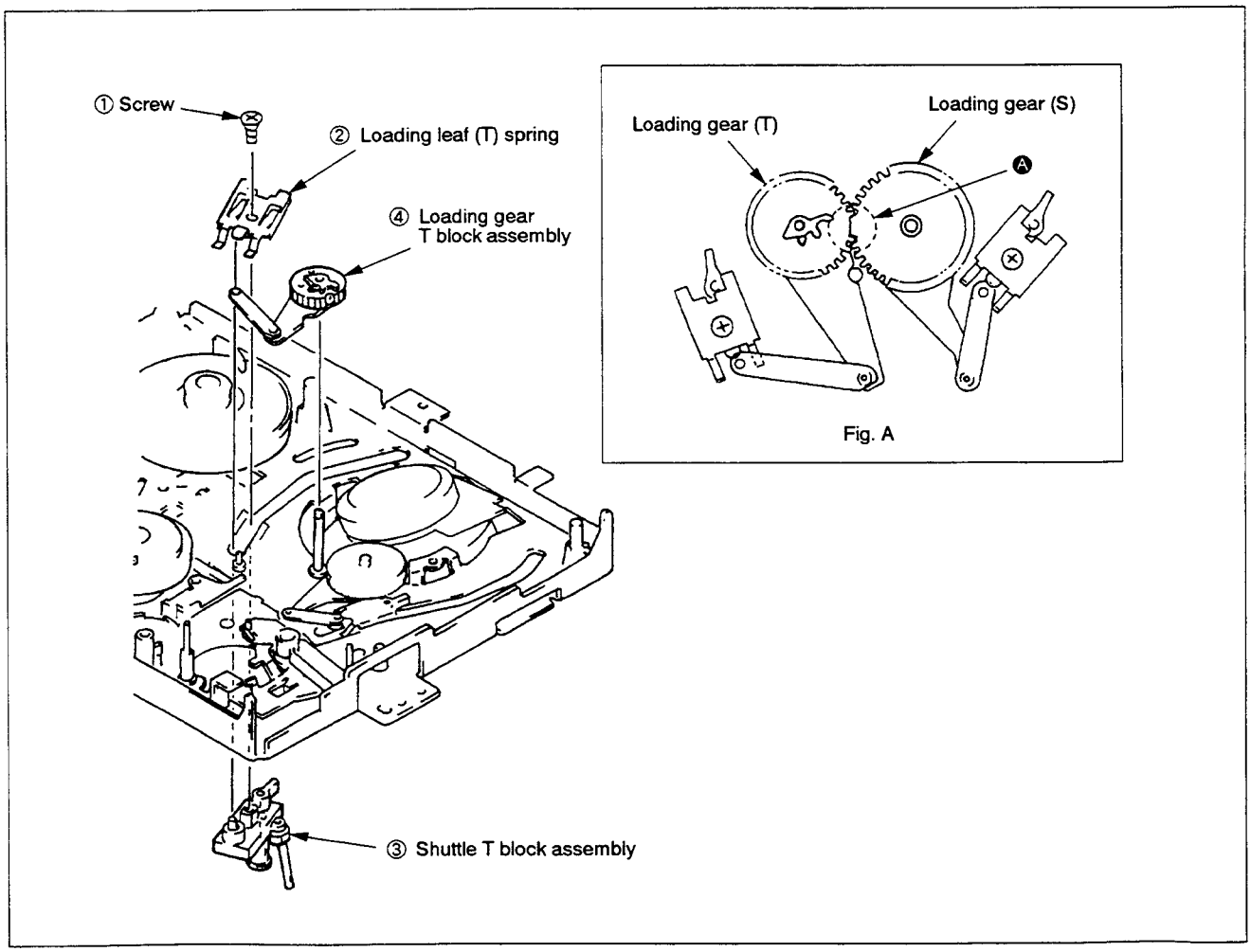

Fig. 3-21

3-20. SHUTTLE S BLOCK AND LOADING GEAR S BLOCK ASSEMBLIES (Fig. 3-22)

1) Remove timing belt. (Refer to 3-3.)
2) Remove CAP brake assembly. (Refer to 3-4.)
3) Remove cam motor chassis block assembly. (Refer to 3-16.)
4) Remove main slider. (Refer to 3-15.)
5) Remove screw ① to remove loading leaf (S) spring ② and shuttle S block assembly ③.
6) Pull out loading gear S block assembly ④.

[Note on Mounting]

- Adjust the phase Ⓐ between loading gear (S) and loading gear (S). (Fig. A)
- Keep clean the surface contacts tape of shuttle S block assembly ③.

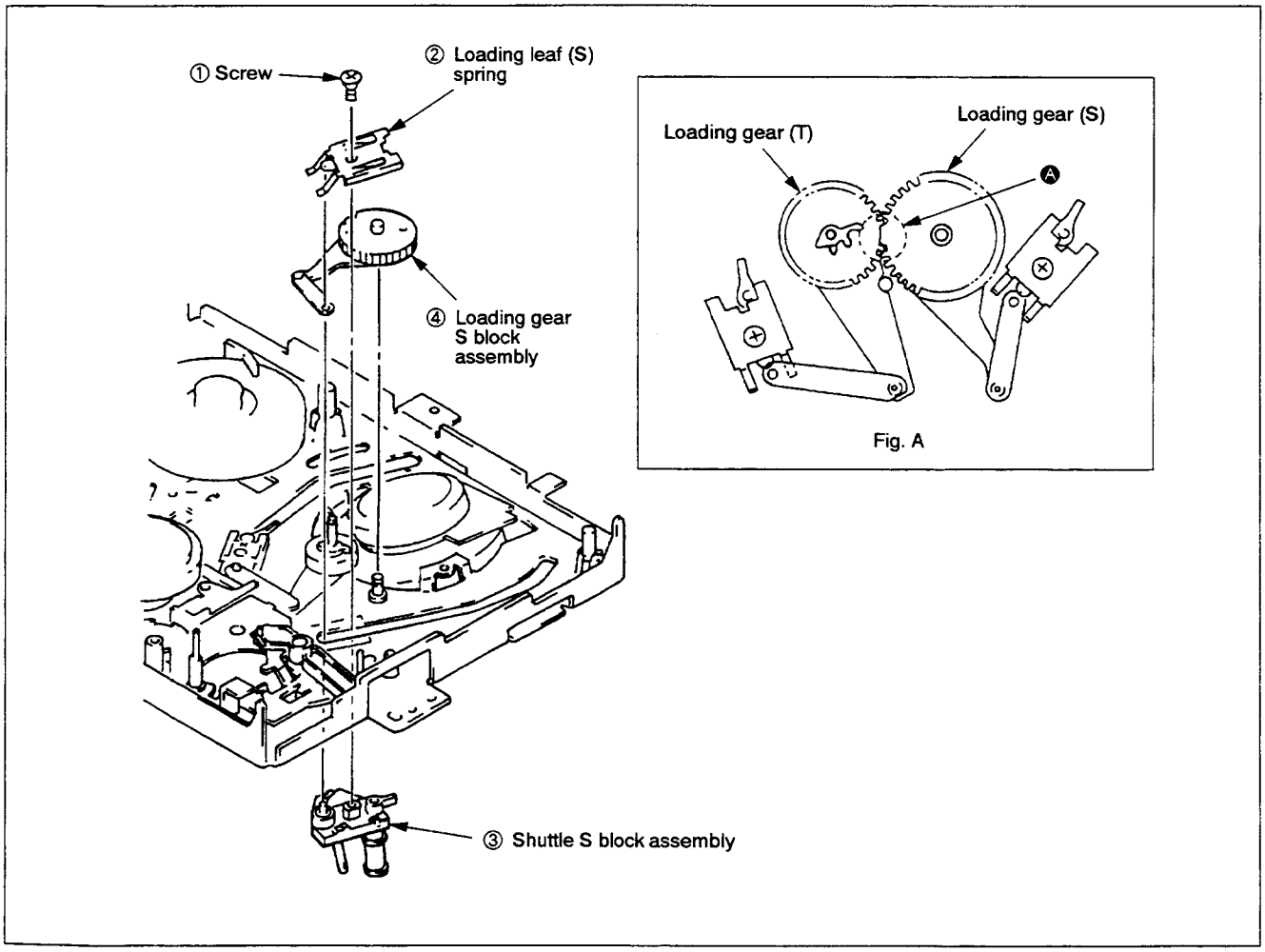

Fig. 3-22

3-21. REEL TABLE (S) ASSEMBLY (Fig. 3-23)

1) Remove tension spring ① from the chassis side.
2) Remove stopper washer (2) ② to pull out soft brake (S) ③.
3) Move TG1 band ④ over the reel table.
4) Remove stopper washer (2) ⑤.
5) While pressing main brake S assembly ⑥, pull out reel table (S) assembly ⑦.

[Note on Mounting]

- Apply one drop of Diamond Oil NT-68 (Jig Ref. No. J-13) to ☆ marked portion before mounting reel table (S) assembly ⑥. (Fig. A)
- Don't touch the hatched portion on reel table (S) assembly ⑥ with bare hand.

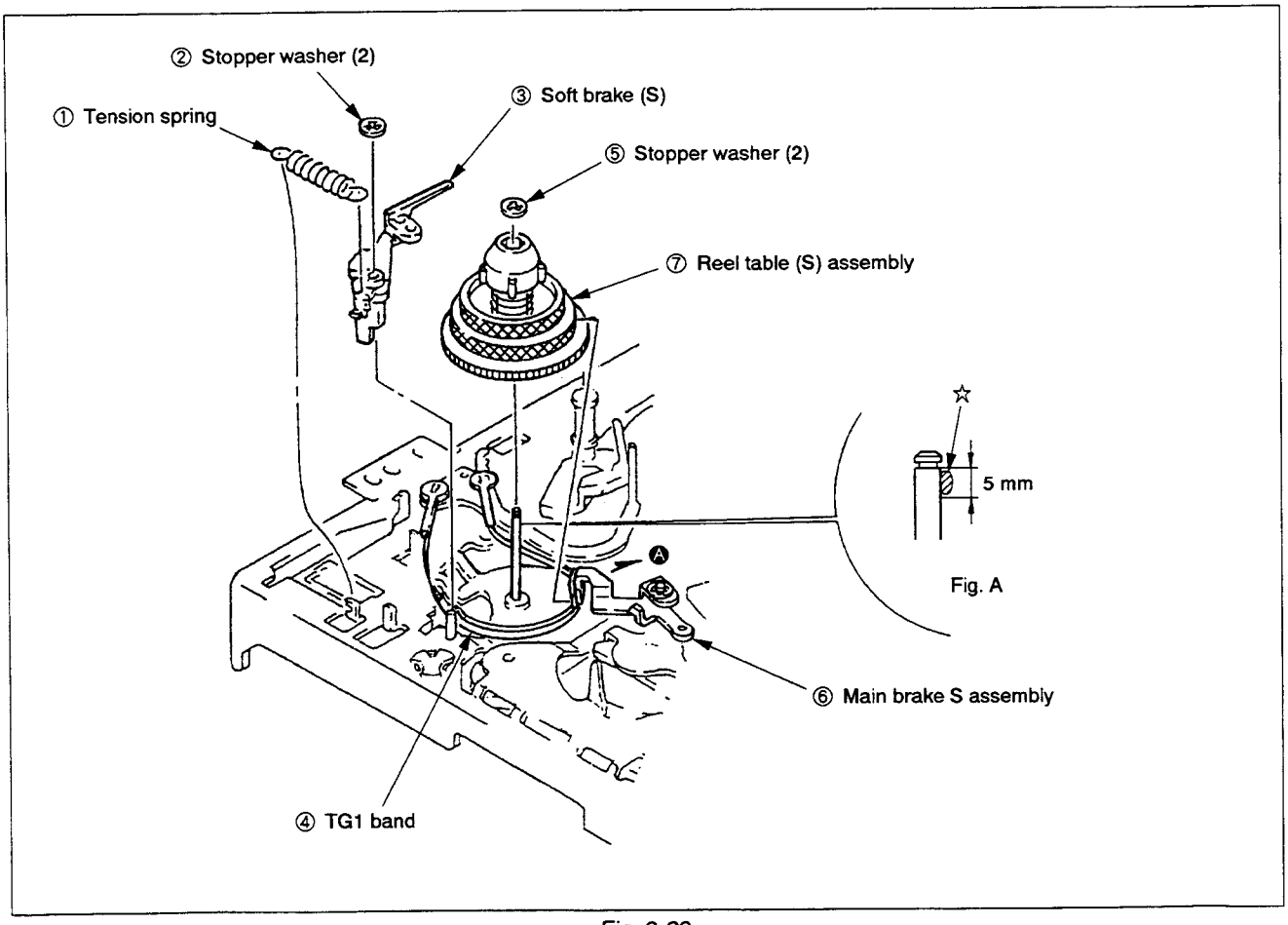

Fig. 3-23

3-22. TG1 ASSEMBLY (Fig. 3-24)

1) Set the mechanism to the loading-end condition referring to 1-1. (Cam gear indicates "LE". (Refer to Fig. A and B of Fig. 3-18.))
2) Remove tension spring ① in the order Ⓐ to Ⓑ.
3) Remove stopper washer (2) ② to pull out TG1 assembly ③.

[Note on Mounting]

- Apply one drop of Diamond Oil NT-68 (Jig Ref. No. J-13) to ☆ marked portion.
- Keep clean the felt side of TG1 assembly.

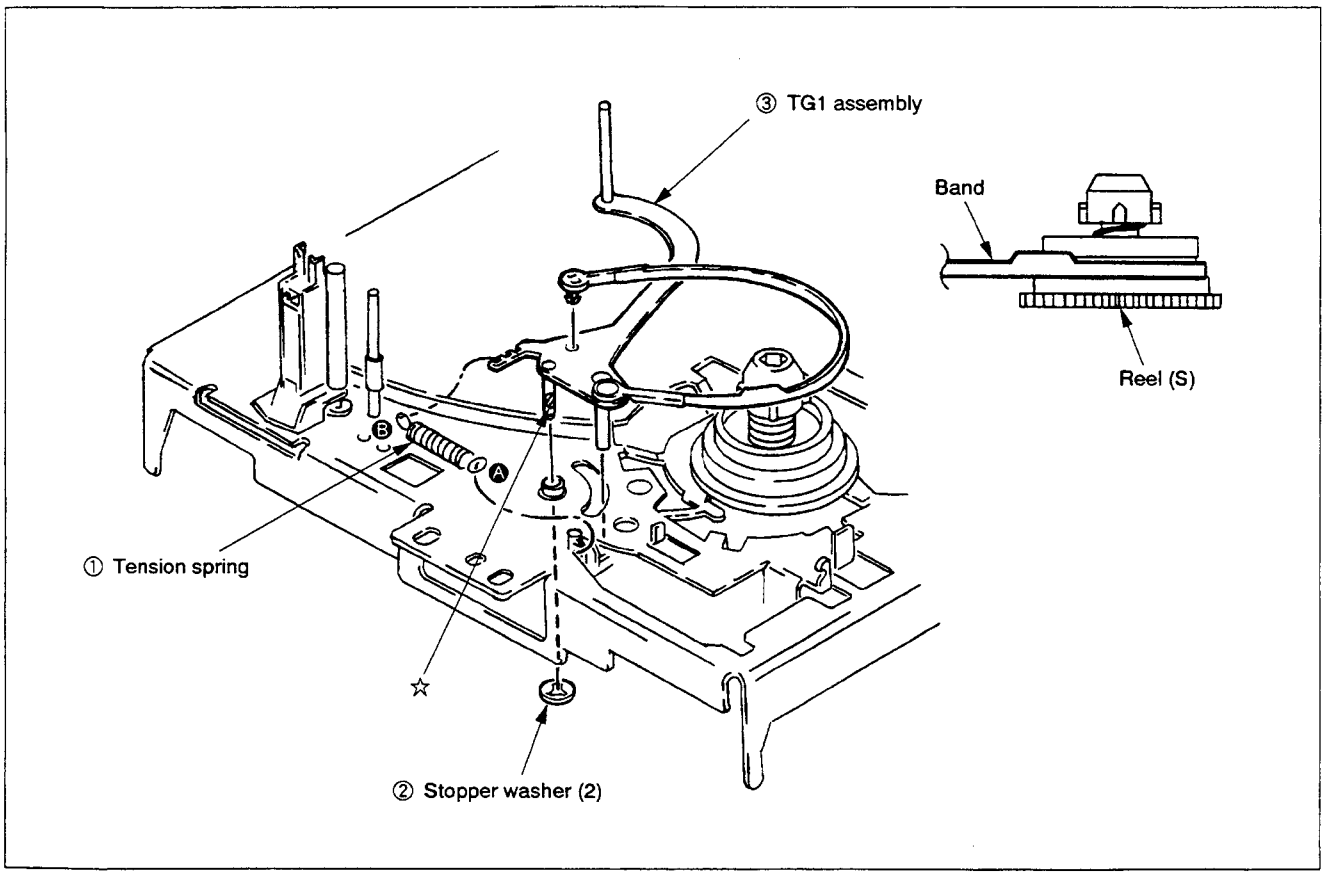

Fig. 3-24

3-23. S WINDING BLOCK ASSEMBLY (Fig. 3-25)

1) Remove timing belt. (Refer to 3-3.)
2) Remove CAP brake assembly. (Refer to 3-4.)
3) Remove cam motor chassis block assembly. (Refer to 3-16.)
4) Remove main slider. (Refer to 3-18.)
5) Remove stopper washer (2) ① to pull out S winding block assembly ②.
6) Remove torsion spring ③.

[Note on Mounting]

- At the last, hang torsion spring ② to the position Ⓐ.
- Apply FLOIL SG-055G (Jig Ref. No. J-12) to ☆ marked portions.

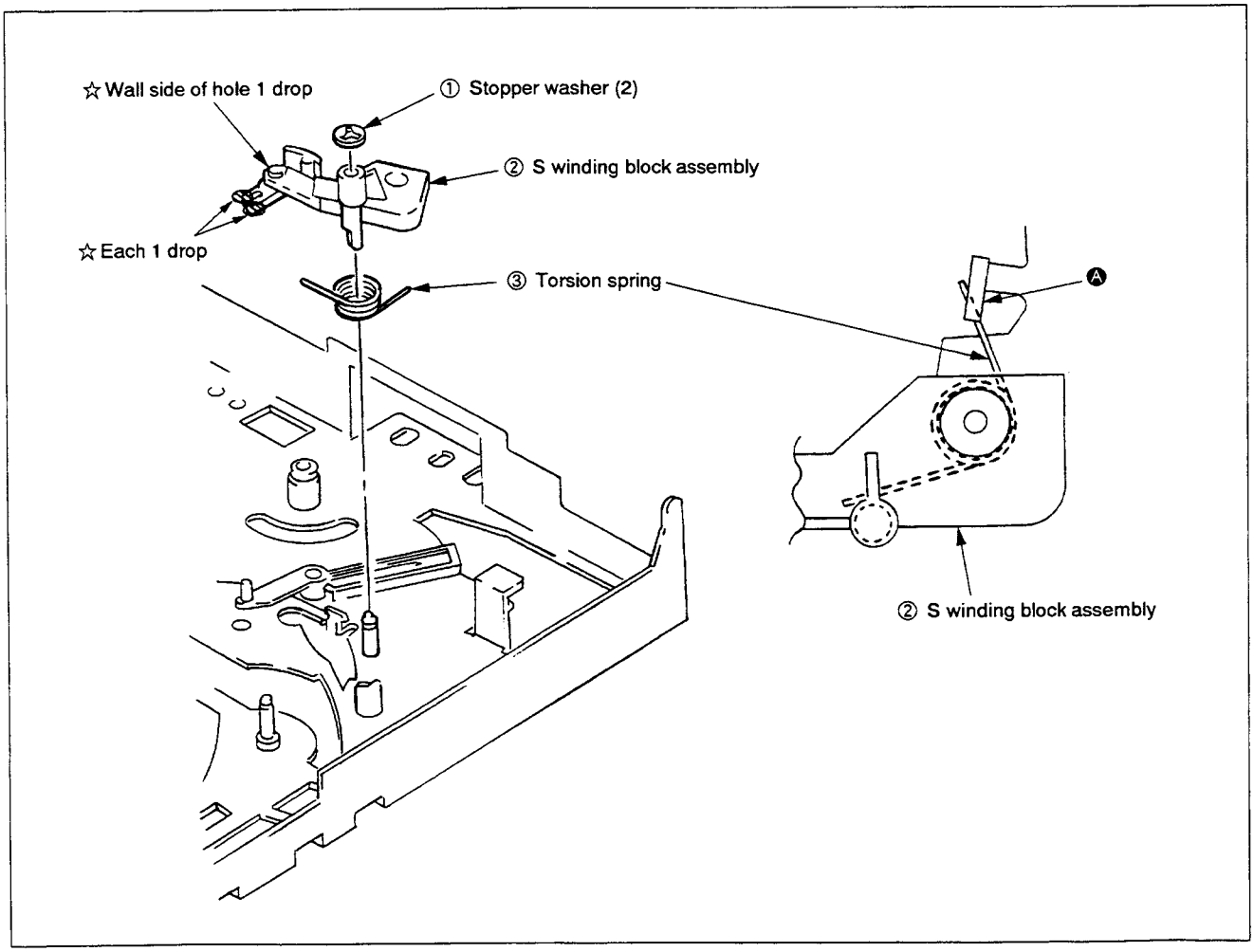

Fig. 3-25

3-24. TRIGGER LEVER AND RKB BLOCK ASSEMBLIES (Fig. 3-26)

1) Remove timing belt. (Refer to 3-3.)
2) Remove CAP brake assembly. (Refer to 3-4.)
3) Remove cam motor chassis block assembly. (Refer to 3-16.)
4) Remove main slider. (Refer to 3-18.)
5) Remove tension spring ① in the order Ⓐ to Ⓑ to remove trigger lever assembly ②.
6) Remove screws (3 × 8) ③ to remove RKB block assembly ④.

[Note on Mounting]

- Apply FLOIL SG-055G (Jig Ref. No. J-12) to ☆ marked portions on trigger lever assembly. (Fig. A)

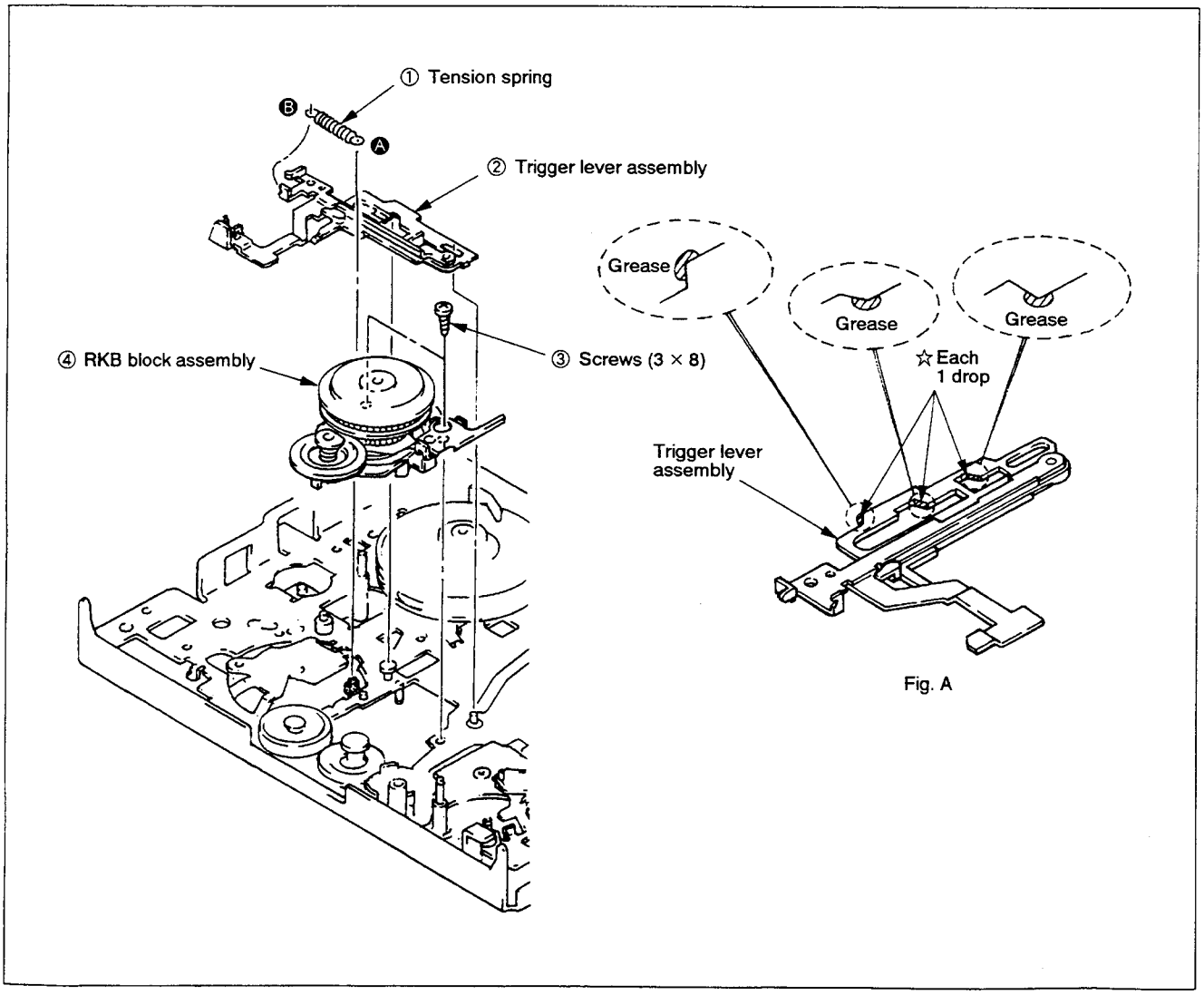

Fig. 3-26

4. ADJUSTMENT

4-1. TAPE PATH ADJUSTMENT

The "Tape path" refers to the route of the tape from the supply reel disk to the take-up reel disc via the video heads.
Each component part of the tape transport system particularly the surface of parts which make direct contact with the tape must always be kept clean, free of dust, oil, scratches and so forth.
The tape path system is factory preadjusted, when parts of the tape transport system are replaced, be sure to make the required adjustments as precisely as possible in order to ensure stable tape transport.

4-1-1. TENSION REGULATOR (TG1) POSITION/ TENSION ADJUSTMENT (Fig. 4-1)

Purpose: stabilizes contact of the video head and the tape to maintain the tension of the tape so that it feeds at a constant level.

• Position adjustment

Mode	Treading is completed without a cassette loaded
Adjustment locations	Eccentric pin of TG1 band assembly

[Adjustment Method]

1) Allow the unit to go through the threading procedure without a cassette loaded.
2) Set the unit to play back, then turn the eccentric pin so that the tip of tension arm goes to the left side line carved on the mechanical chassis. (Fig. A)
3) After adjustment, go through the loading procedure once more without a cassette loaded, then check the position of the tension arm.

• Tension adjustment

Mode	Playback
Measuring instrument/tool	Torque cassete
Adjustment locations	Position for hooking the tension spring
Specified value	36 to 44 g•cm

[Adjustment Method]

1) Playback the torque cassette.
2) Check that the center value deviation reading on the torque cassette meets with the standards.
3) When the reading is higher than the standards: Move the spring toward direction Ⓐ.
   When the reading is less than the standards: Move the spring toward direction Ⓑ.

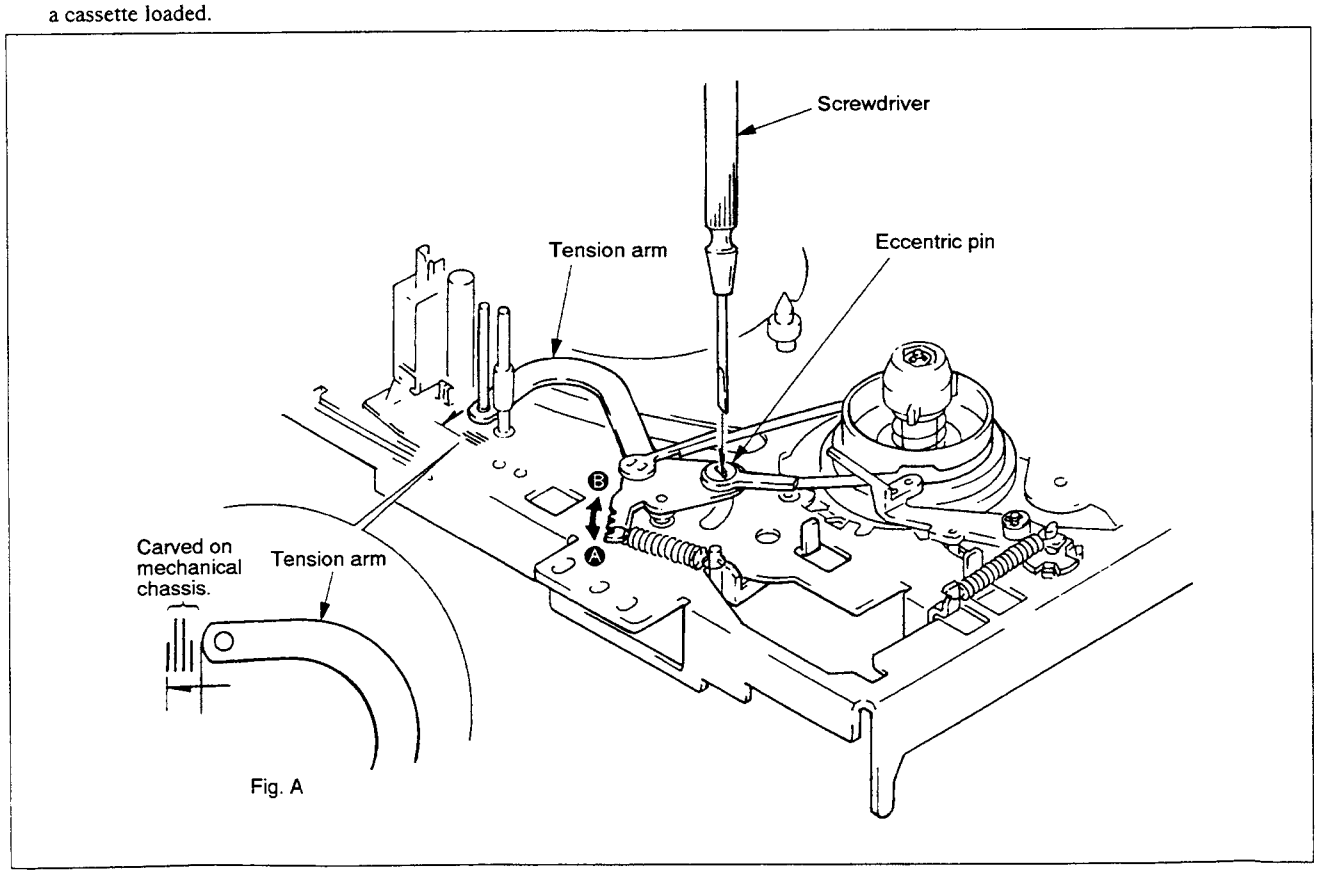

Fig. 4-1

4-1-2. TG8 GUIDE ROLLER HEIGHT ADJUSTMENT (Fig. 4-2)

Mode	Playback
Jig	Blank tape
Adjustment locations	Guide roller height adjustment screw
Specified value	0 to 0.1 mm

Procedure:

1) Set the tape, during CUE playing back, check the height from lower flange of TG7 to the running tape. (Fig. A)
2) During REV playing back, check the height from lower flange of TG7 to the running tape. (Fig. B)
3) When the difference between items 1) and 2) doesn't go to specified value, adjust by turning TG8 guide roller height adjustment screw.
4) Check the tape is creased or not between the capstan and TG8, adjust with TG8 guide roller height adjustment screw so that the tape is not creased during normal playback, CUE and REV.

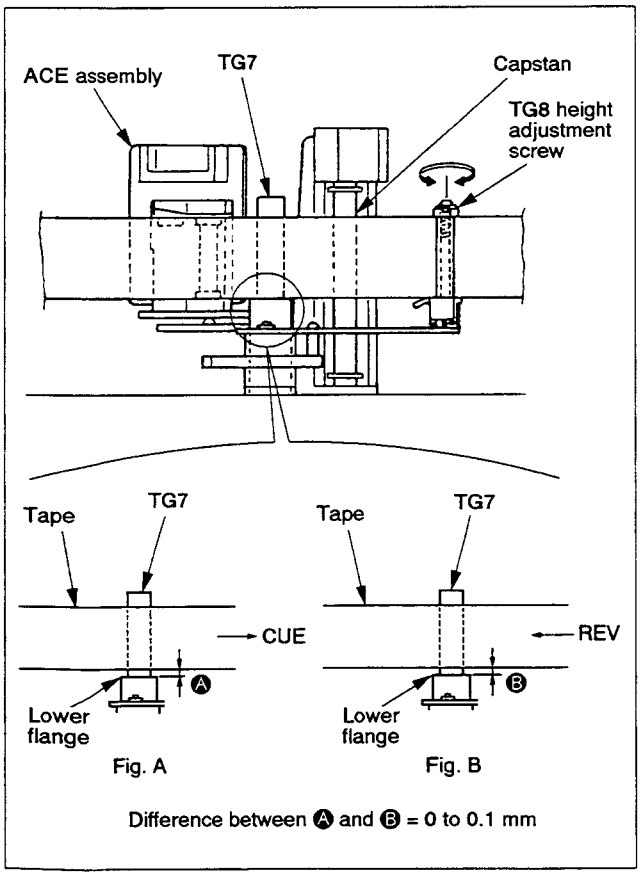

Fig. 4-2

4-1-3. HEIGHT ADJUSTMENT OF GUIDE ROLLERS NO. 3 AND NO. 6 (Fig. 4-3)

Mode	Playback
Signal	Alignment tape
Measuring instrument	Oscilloscope
Measuring point	CH-1: Connector PB RF pin for RF PC board check. CH-2: Connector RF SW P pin for RF PC board check.
Adjustment locations	Guide roller height adjuster screw

[Adjustment Method]

1) Tracking (playback): Turn off the auto tracking, then press the tracking buttons [▽] and [△] simultaneously to set the tracking at the center position.
   (If adjustment is made after the drum is replaced, the tracking must be set at the max. RF output position.)
2) Height adjuster screw: Even out the RF output waveforms.
3) Press the tracking buttons (playback), [▽] and [△] alternately.
4) Check that RF output drops the same amount at the front and rear edges.

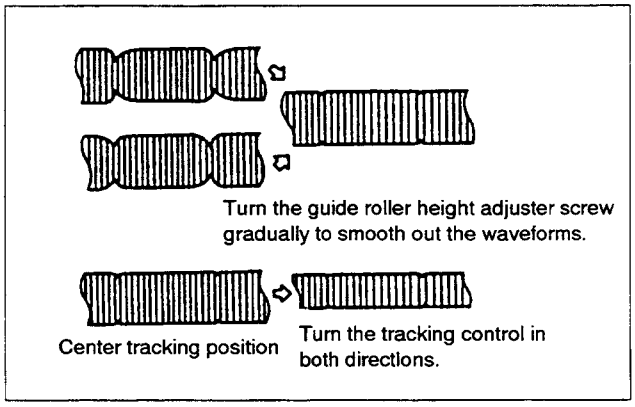

Fig. 4-3

4-1-4. ACE HEAD ASSEMBLY ADJUSTMENT (ROUGH ADJUSTMENT) (Figs. 4-4 and 4-5)

Purpose: Allows the tape to make even contact with the head for recording and playback of the specified track.

Mode	Playback
Tool	Blank tape
Adjustment locations	Height adjuster nut, Tilt adjuster screw

[Adjustment Method]

1) Mount the ACE head assembly. At this time, adjust the height so that the height of guide flange No. 7 matches the level of the lower edge of the control head.
2) Remove the adjustment tool and load a new tape, then set the unit for playback.
3) Check that the tape does not curl or rise up noticeably near the ACE head.
4) If the tape curls up or rises noticeably, readjust the tilt adjuster screw, the azimuth adjuster screw and the height adjuster nut.
   (The height of the ACE head should be adjusted so that the lower edge of the tape is approx. 0.1 to 0.15 mm from the control head.)
5) Perform precision adjustment.

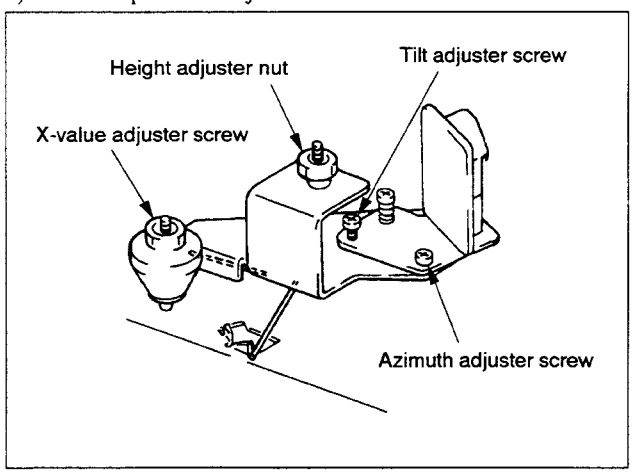

Fig. 4-4

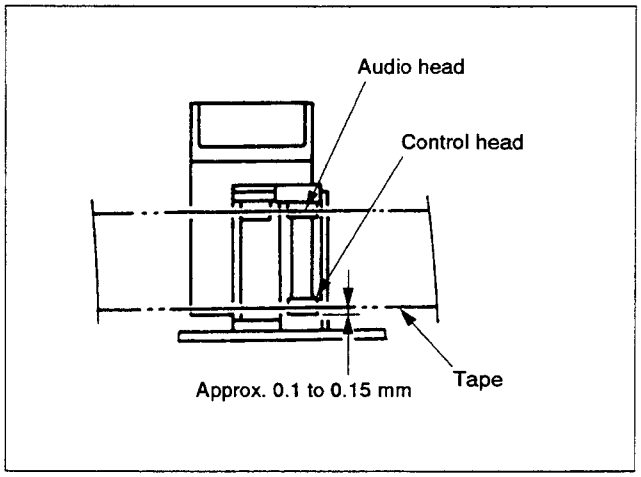

Fig. 4-5

4-1-5. ACE HEAD ASSEMBLY ADJUSTMENT (PRECISION ADJUSTMENT)

Mode	Playback
Signal	Alignment tape (1kHz track)
Measuring instrument	Oscilloscope
Measuring point	Audio output terminal
Adjustment locations	Azimuth adjuster screw, Height adjuster nut, Tilt adjuster screw

[Adjustment Method]

1) Adjust the tilt adjuster screw in the FWD or REV mode so that the lower flange of guide No. 7 does not curl up or rise.
2) Alternately adjust the azimuth adjuster screw, the height adjuster nut, and the tilt adjuster screw to maintain even audio output at maximum with minimum deviation.

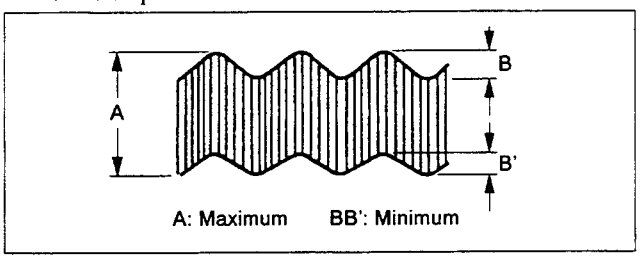

Fig. 4-6

4-1-6. X-VALUE ADJUSTMENT

Purpose: To obtain compatibility with other VTR

Precaution: Be sure to perform the preset tracking adjustment before perform this adjustment. (Refer to the Service Guide.)
Turn off the auto tracking and set the VTR for manual tracking mode.

Mode	Playback
Signal	Alignment tape
Measuring instrument	Oscilloscope
Measuring point	CH-1: Connector PB RF pin for RF PC board check. CH-2: Connector RF SW P pin for RF PC board check.
Adjustment locations	X-value adjuster screw

[Adjustment Method]

- **Adjustment by Hi-Fi alignment tape (NTSC only)**
  When the tracking is set at the center position (by pressing the ▽ and △ keys simultaneously), adjust the RF output to maximum.

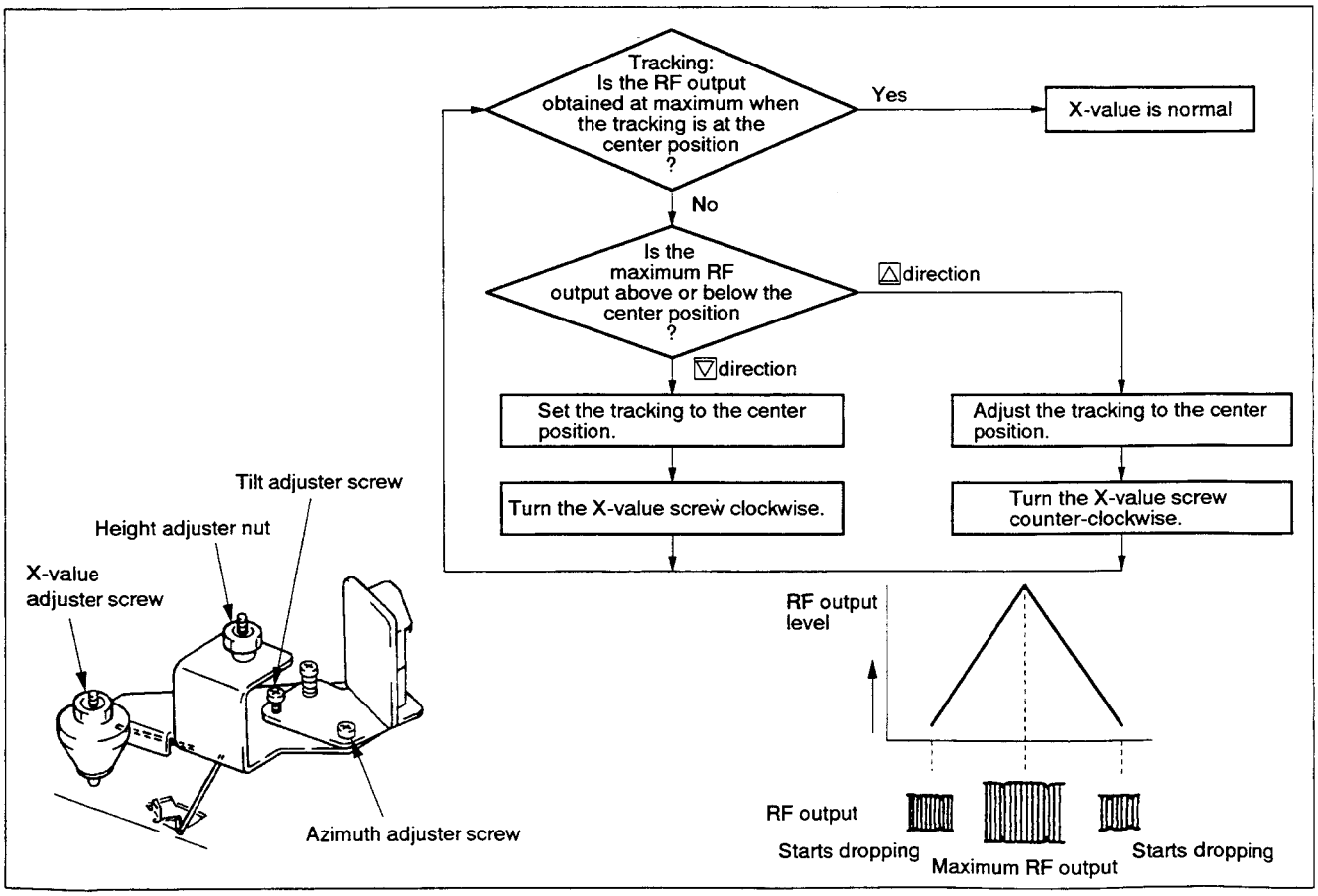

Fig. 4-7

- **Adjustment by alignment tape**

  Adjust the X-value adjuster screw so that maximum RF output is obtained and also that the RF output drops to the same position on pressing the respective ▽ and △ buttons while the tracking is set at the center position.

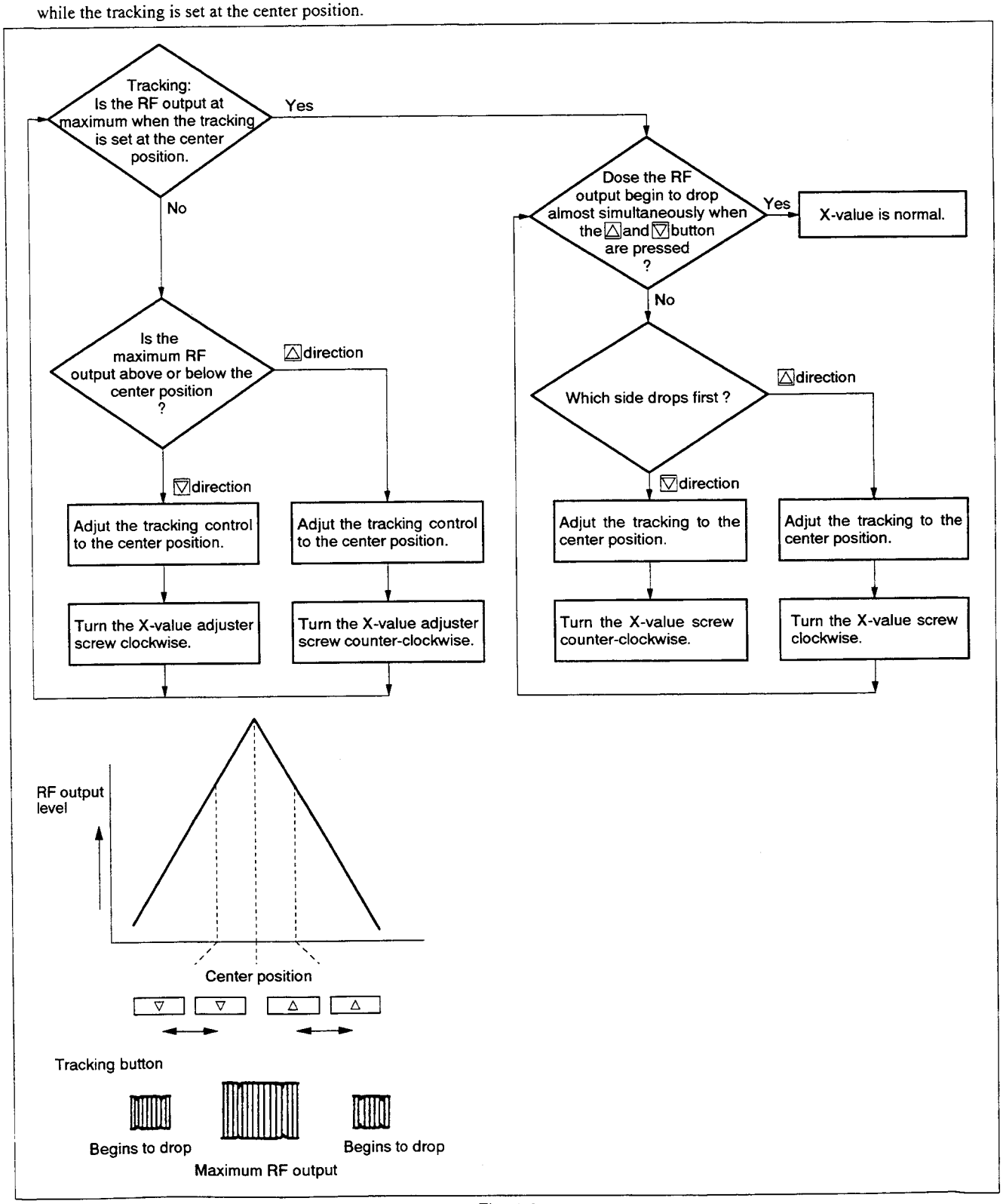

Fig. 4-8

4-1-7. ADJUSTMENTS AFTER REPLACING THE DRUM (VIDEO HEAD)

Purpose: Co-relative height, X-value and other factors of the drum will deviate from those of the guide roller. If the drum is replaced properly, these deviations are extremely small.

Precaution: Turn off the auto tracking and set the manual tracking mode.

Mode	Playback
Signal	Alignment tape, blank tape
Measuring instrument	Oscilloscope
Measuring point	CH-1: Connector PB RF pin for RF PC board check. CH-2: Connector RF SW P pin for RF PC board check.
Adjustment locations	Guide roller (refer to 4-1-2, 4-1-3.) Switching position, Tracking preset, SP delay mono-multi (Refer to the Service Manual), X-value. (refer to 4-1-6.)

[Adjustment Method]

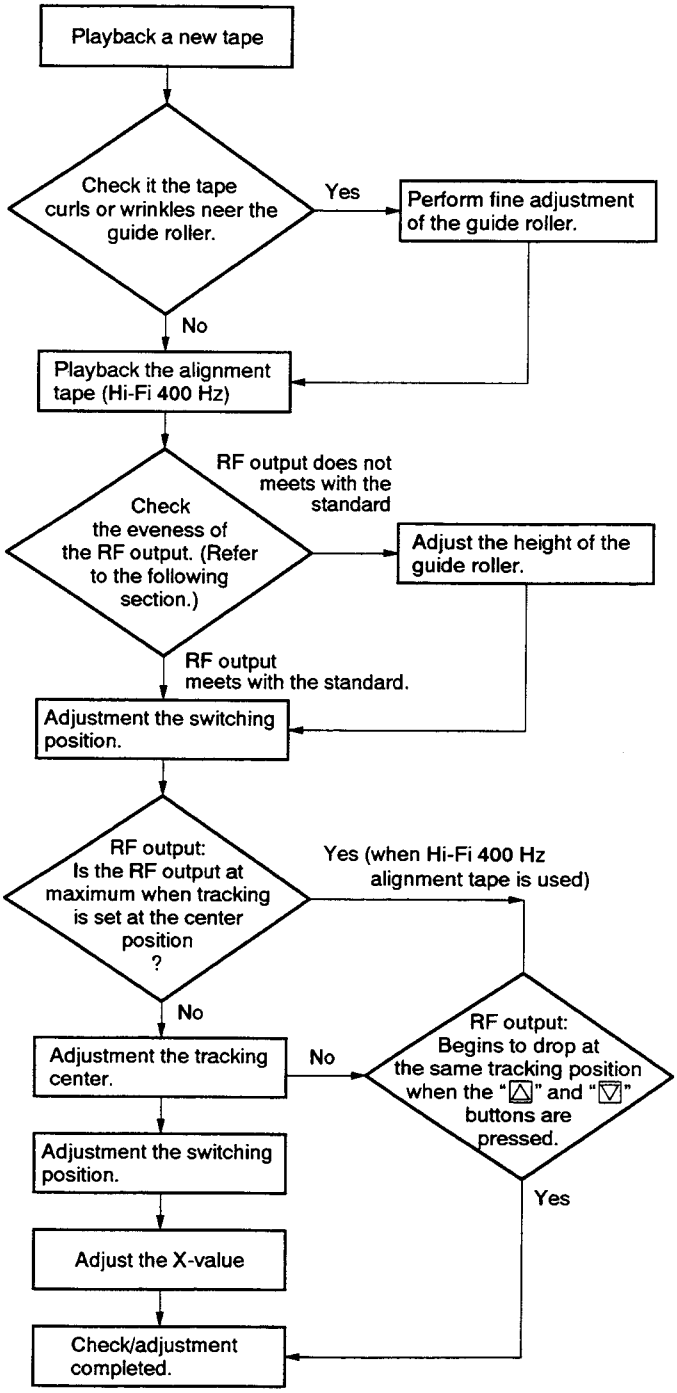

[Checking the evenness and fluctuation of the RF output]

1) Set the RF output to the maximum level using the tracking buttons.

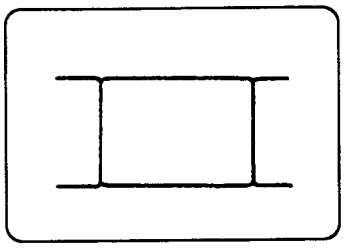

2) Perform fine adjustment of the voltage level range of the oscilloscope, then adjust the RF output deviation to within 4 gradations.

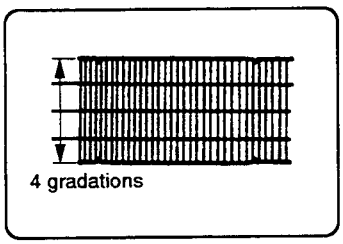

3) Press the tracking buttons and adjust the maximum amplitude of the RF output to within 3 gradations.
4) At this time, check if the minimum amplitude is more than 2 gradations.

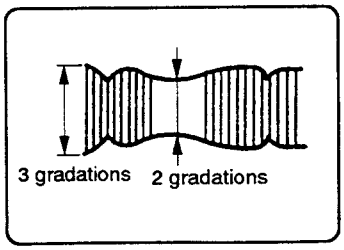

5) Check that the RF output fluctuation between minimum and maximum levels is within 13%.

4-1-8. CHECKING THE TENSION AND TORQUE

Purpose: To check that the tension, torque and compression force of the tape take-up section and mobile sections to ensure smooth tape run and achieve standard VTR performance.
If the tape transport is not smooth or problems occur in relation to the tape transport speed, perform the following check.

Mode	Each operation mode without loading a cassette tape. (Refer to section 1-3.)
Measuring instrument	Torque gauge, Torque gauge adaptor

Item	VTR operation mode	Reel to be measured	Measurement value
Main brake torque	Stop	Supply and take-up reels	170 g•cm or more
Review torque	Review	Supply reel	180 ± 30 g•cm (using the torque cassette)
Take-up torque	Playback	Take-up reel	95 ± 25 g•cm (using the torque cassette)
Back tension torque	Playback	Take-up reel	33 to 44 g•cm (using the torque cassette)

[Check Method]

Measure the torque using the torque gauge and torque gauge adaptor with the torque gauge fixed.

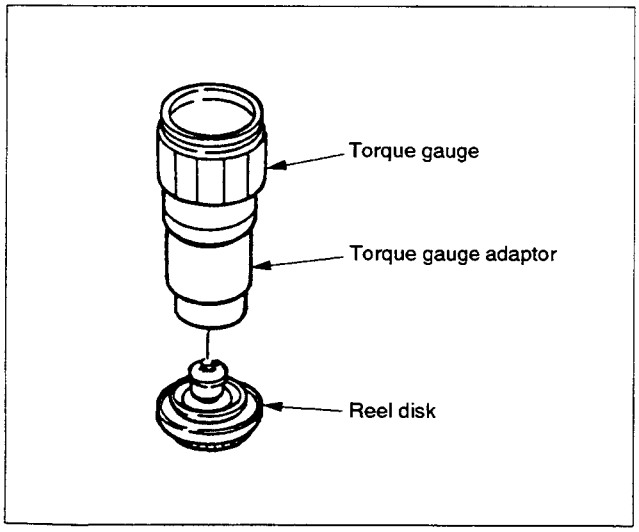

Fig. 4-9

V03056

VHS MECHANICAL ADJUSTMENT MANUAL IV

SONY®
SERVICE MANUAL

H MECHANISM

SUPPLEMENT-1

1. How to Use the Mode Selector II for Adjusting H Type Mechanism Assembly.
2. Adjusting Mechanism Using New Alignment Tape (KRV-52NE For NTSC).

File this supplement with the VHS mechanical adjustment IV.

TABLE OF CONTENTS

Section	Title	Page
1.	HOW TO USE THE MODE SELECTOR II FOR ADJUSTING H TYPE MECHANISM ASSEMBLY	2
1-1.	Outline	2
1-2.	Preparation	2
1-3.	Connection	2
1-4.	Operation	2
1-5.	Precautions	2
2.	ADJUSTING THE MECHANISM USING NEW ALIGNMENT TAPE (KRV-52NE for NTSC)	4
2-1.	Adjustment Using Alignment Tape (KRV-52NE for NTSC having no version No.)	4
2-1-1.	X-Value Adjustment (Using the tape having no version No.)	4
2-2.	Adjustment Using Alignment Tape (KRV-52NE for NTSC having the version No.)	6
2-2-1.	X-Value Adjustment (Using the tape having the version No.)	6
2-3.	Adjusting the Mechanism Using Alignment Tape (KRV-52NE for NTSC)	10
2-3-1.	Height Adjustment of Guide Rollers No. 3 and No. 6	10
2-3-2.	ACE Head Assembly Adjustment (Rough Adjustment)	11
2-3-3.	ACE Head Assembly Adjustment (Precision Adjustment)	11
2-3-4.	Adjustments After Replacing the Drum (Video Head)	12

MICROFILM

1. HOW TO USE THE MODE SELECTOR II FOR ADJUSTING H TYPE MECHANISM ASSEMBLY

1-1. OUTLINE

To activate the VHS system H type mechanism assembly using mode selector II (J-6082-282-A), use connector conversion jig (J-6090-052-A). By using the connector conversion jig, the following operations are possible.

- Loading and unloading action by the loading motor
- Reading of the current setting of the mode switch
- Normal and reverse rotation of the capstan motor

1-2. PREPARATION

1-2-1. ADDITION OF POWER SUPPLY CABLE (Already added Mode Selector II also available)

In order to drive the capstan motor, the power +5 V and +12 V are supplied from the Mode Selector II. Disassemble the D-SUB connector of the Mode Selector cable, then solder the following three places.

Supplied 3-pin cable	DSUB connector of the mode selector II	Voltage
Pin 1 (Red index)	Pin 20	+12 V
Pin 2	Pin 25	GND
Pin 3	Pin 24	+5 V

- Connector pin number assignment of the DSUB connector (From the soldering side)

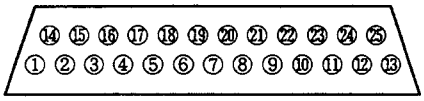

- When connections are made, check that +5 V and +12 V are available at the 3-pin cable connector.

1-2-2. CHECKING THE SOFTWARE VERSION

Turn on the power of the mode selector II.

If the reading for the software version on the mode selector II is not 1.10 or higher, replace the New ROM (J-6082-314-A).

1-3. CONNECTION

1-3-1. CONNECTION BETWEEN THE CONNECTOR CONVERSION JIG AND THE MODE SELECTOR II (See Fig. 1-1)

Insert the connectors of the two 6-pin cables (one is white and the other is black) and the 3-pin cable from the mode selector II to the corresponding connectors on the connector conversion jig (J-6090-052-A).

1-3-2. CONNECTION BETWEEN THE CONNECTOR CONVERSION JIG AND THE H TYPE MECHANISM ASSEMBLY

With the power of the mode selector II turned off, insert the following three connectors to the corresponding connectors on the H type mechanism assembly.

- 3-pin connector for the loading motor
- 5-pin connector for the mode switch
- 8-pin connector for the capstan motor

Set the speed control for the minimum setting (fully counter-clockwise).

1-4. OPERATION

1-4-1. OPERATION OF THE LOADING MOTOR ON THE H TYPE MECHANISM ASSEMBLY

(1) Select the H type mechanism assembly setting on the mode selector II .

(2) After this, procedures are the same as those for the previous model types.
For the operating method, see pages 3 to 5 of "8 mm Video Mechanism Manual VI (TK Mechanism) Supplement-1".
For the loading method, see page 3 of "VHS Mechanical Adjustment Manual IV (H Mechanism)".

1-4-2. OPERATION OF THE CAPSTAN MOTOR ON THE H TYPE MECHANISM ASSEMBLY

(1) For the loading motor operation under Section 1-4-1, change the mode setting to the FF/REW mode with the mode switch.

(2) Turn the speed control gradually in clockwise direction, and the capstan motor starts rotating. To turn the capstan motor in desired rotating direction, change the FWD/RVS setting of the rotating direction switch.

1-5. PRECAUTIONS

- Turn the speed control only when necessary. Otherwise, hold the speed control turned at fully counterclockwise direction. If the power of the mode selector II is turned on with the speed control turned in clockwise direction, +12V power fails and the power of the mode selector II cannot be turned on.
- Although the connector conversion jig (J-6090-052-A) has rubber feet, do not make a short circuit on the bottom surface of the connector conversion jig via foreign conductive materials.

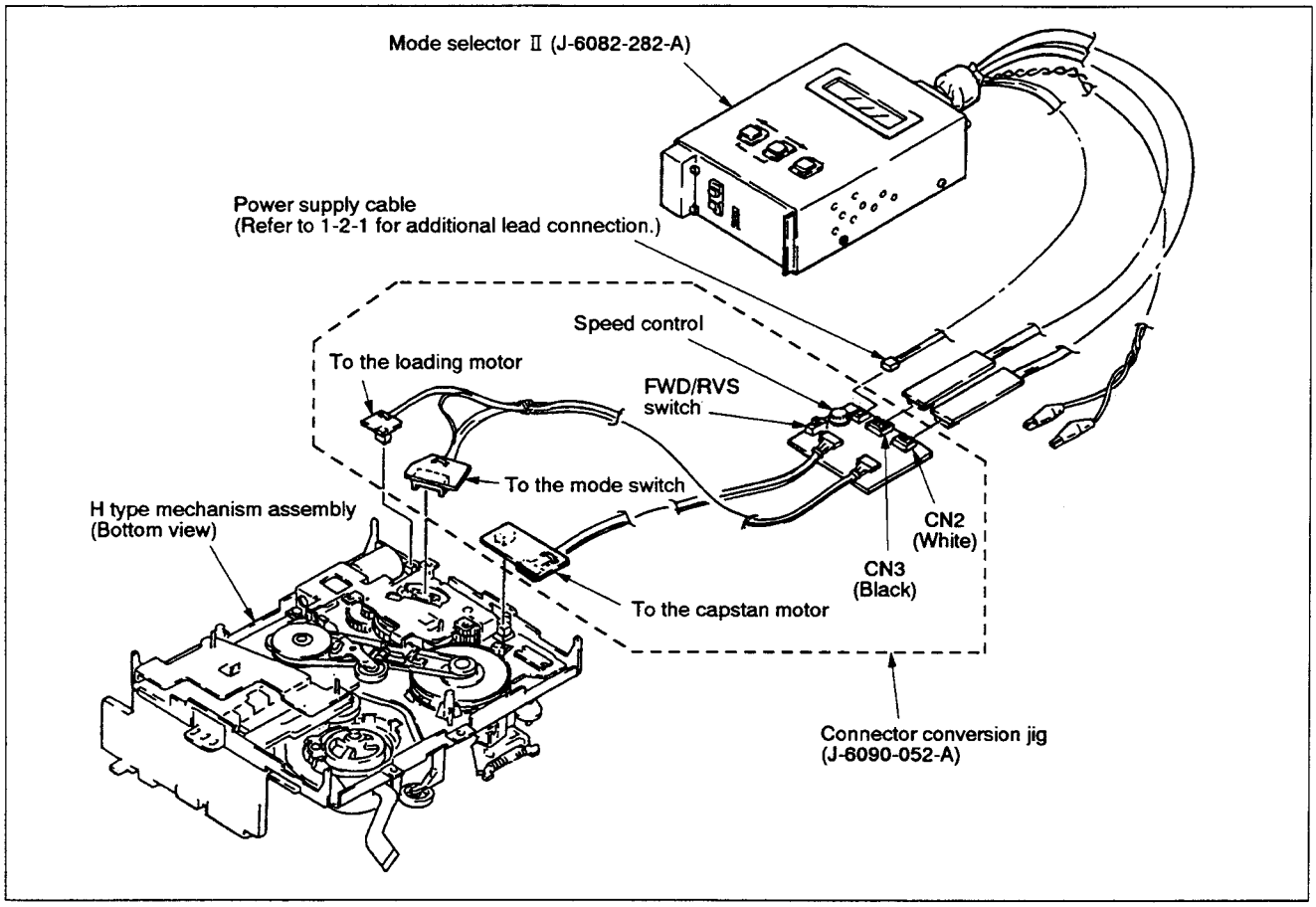
Mode selector II (J-6082-282-A)
Power supply cable
(Refer to 1-2-1 for additional lead connection.)
Speed control
To the loading motor
FWD/RVS
switch
To the mode switch
H type mechanism assembly
(Bottom view)
CN2
(White)
CN3
(Black)
To the capstan motor
Connector conversion jig
(J-6090-052-A)

Fig. 1-1

2. ADJUSTING THE MECHANISM USING NEW ALIGNMENT TAPE (KRV-52NE for NTSC)

The conventional alignment tape (For NTSC) is now replaced with alignment tape KRV-52NE, and the following describes how to align the mechanism using the KRV-52NE. For details on the use of KRV-51N2 for each model, refer to the service manuals which will be issued in the future.

Name	Parts No.	Remarks
Alignment tape KRV-52NE for NTSC	8-192-605-41	For tape path, audio azimuth, and X-value adjustments
Alignment tape KRV-51N2 for NTSC	8-192-605-32	For electrical adjustments (RF, AF, and switching position) and operation check

Note: The KRV-52NE has or does not have Ver No. depending on new or old type as shown below. (New one has Ver No.)
Note that an adjusting method of X-value is different.

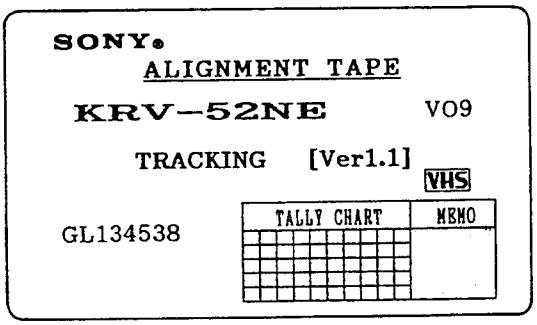

Contents:
KRV-52NE (NTSC)

Time	Video	Audio
20 min.	Recording only at 1 MHz, A-ch. EP mode RF skipping once per 5 frames	5 kHz full tracks

KRV-51N2 (NTSC)

Class	Mode	Time	Video	Audio (HIFI/Normal)
1	SP	7 min.	Color bar	400 Hz
2	SP	3 min.	Mono. scope	400 Hz
3	EP	7 min.	Color bar	400 Hz
4	EP	3 min.	Mono. scope	400 Hz

2-1. ADJUSTMENT USING ALIGNMENT TAPE (KRV-52NE for NTSC having no version No.)

2-1-1. X-VALUE ADJUSTMENT (Using the tape having no version No.)

Purpose: To obtain compatibility with other VCRs.

Precaution: Before starting to adjust X-value, set the tracking control at the center position. To set the tracking control at the center position for the VCRs equipped with the ▲ and ▼ tracking control keys, press both the ▲ and ▼ tracking control keys at the same time. For the VCRs not equipped with the tracking control keys, deactivate the automatic tracking control by pressing the tracking AUTO/MANUAL key on the remote control unit during threading operation (after a tape is inserted but before the VCR starts playing back the tape).

Mode	Playback
Signal	Alignment tape KRV-52NE (For NTSC having no version No.)
Measuring instrument	Oscilloscope TIM/DIV: 2ms Trigger source: CH2 Trigger slope: +
Measuring point	CH-1: Connector PB RF pin for RF PC board check CH-2: Connector RF SWP pin for RF PC board check
Adjustment locations	X-value adjuster screw

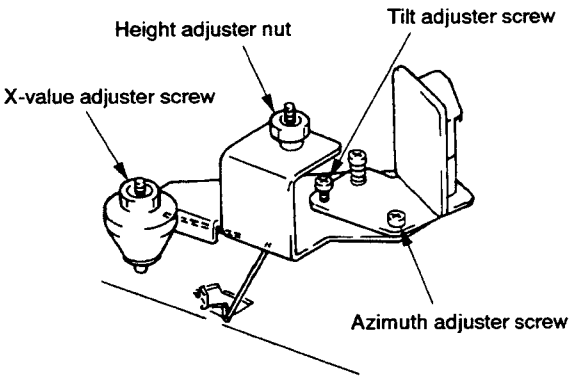

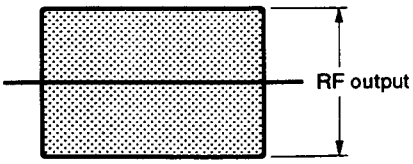

RF output shall be maximum at the center position of the tracking control.

[Adjustment Method]
Set the tracking control at the center position. For the VCRs equipped with narrow gap video heads, set the X-value adjustment screw where a maximum RF output is obtained. For the VCRs equipped with wide gap video heads, set the X-value adjustment screw both where a maximum RF output is obtained and where the RF output decreases immediately when the ▼ tracking control key is pressed.

X-VALUE ADJUSTMENT (Using the tape having no version No.)

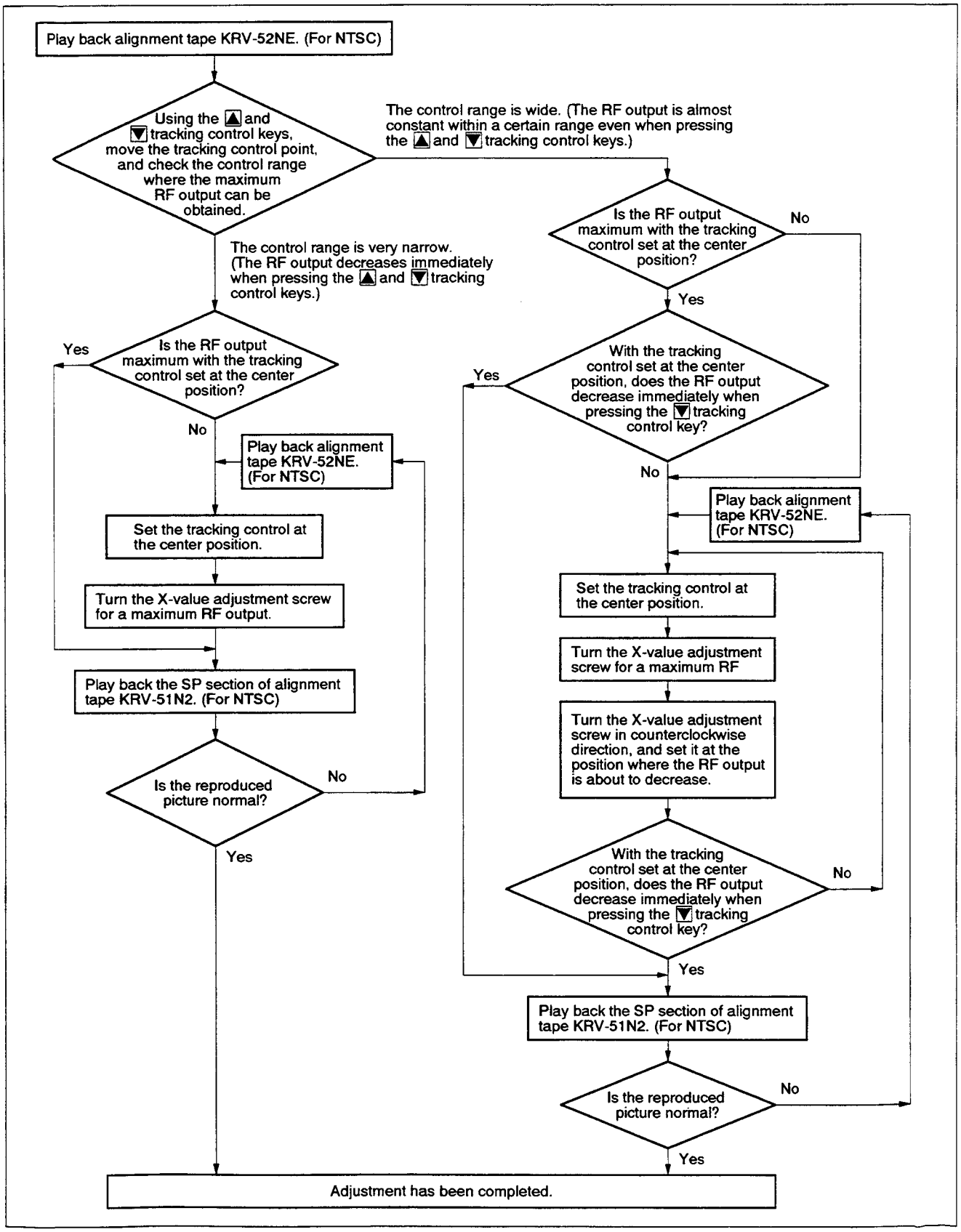

When adjustment is complete, adjust the height of No. 3 and No. 6 guide rollers on page 10.

2-2. ADJUSTMENT USING ALIGNMENT TAPE (KRV-52NE for NTSC having the version No.)

2-2-1. X-VALUE ADJUSTMENT (Using the tape having the version No.)

Purpose: To obtain compatibility with other VCRs.

Precaution: Before starting to adjust X-value, set the tracking control at the center position. To set the tracking control at the center position for the VCRs equipped with the ▲ and ▼ tracking control keys, press both the ▲ and ▼ tracking control keys at the same time. For the VCRs not equipped with the tracking control keys, deactivate the automatic tracking control by pressing the tracking AUTO/MANUAL key on the remote control unit during threading operation (after a tape is inserted but before the VCR starts playing back the tape).

Mode	Playback
Signal	Alignment tape KRV-52NE (For NTSC having the version No.)
Measuring instrument	Oscilloscope TIM/DIV: 2ms Trigger source: CH2 Trigger slope: +
Measuring point	CH-1: Connector PB RF pin for RF PC board check CH-2: Connector RF SWP pin for RF PC board check
Adjustment locations	X-value adjuster screw

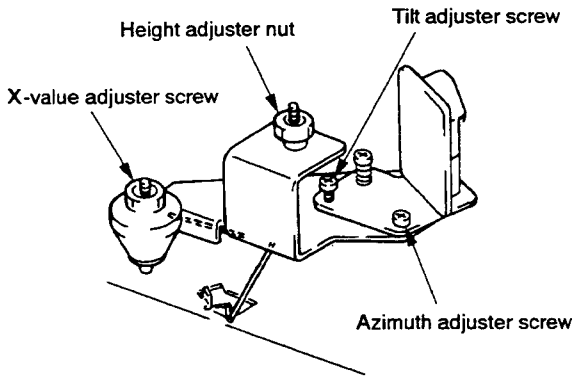

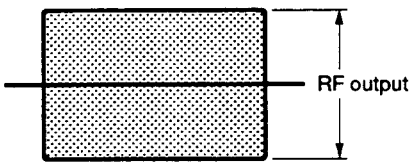

RF output shall be maximum at the center position of the tracking control.

[Adjustment Method]

Set the tracking control at the center position. For the VCRs equipped with narrow gap video heads, set the X-value adjustment screw where a maximum RF output is obtained. For the VCRs equipped with wide gap video heads, set the X-value adjustment screw both where a maximum RF output is obtained and where the RF output decreases immediately when the ▼ tracking control key is pressed.

1. Adjusting X-value (Using the tape having the version No.)

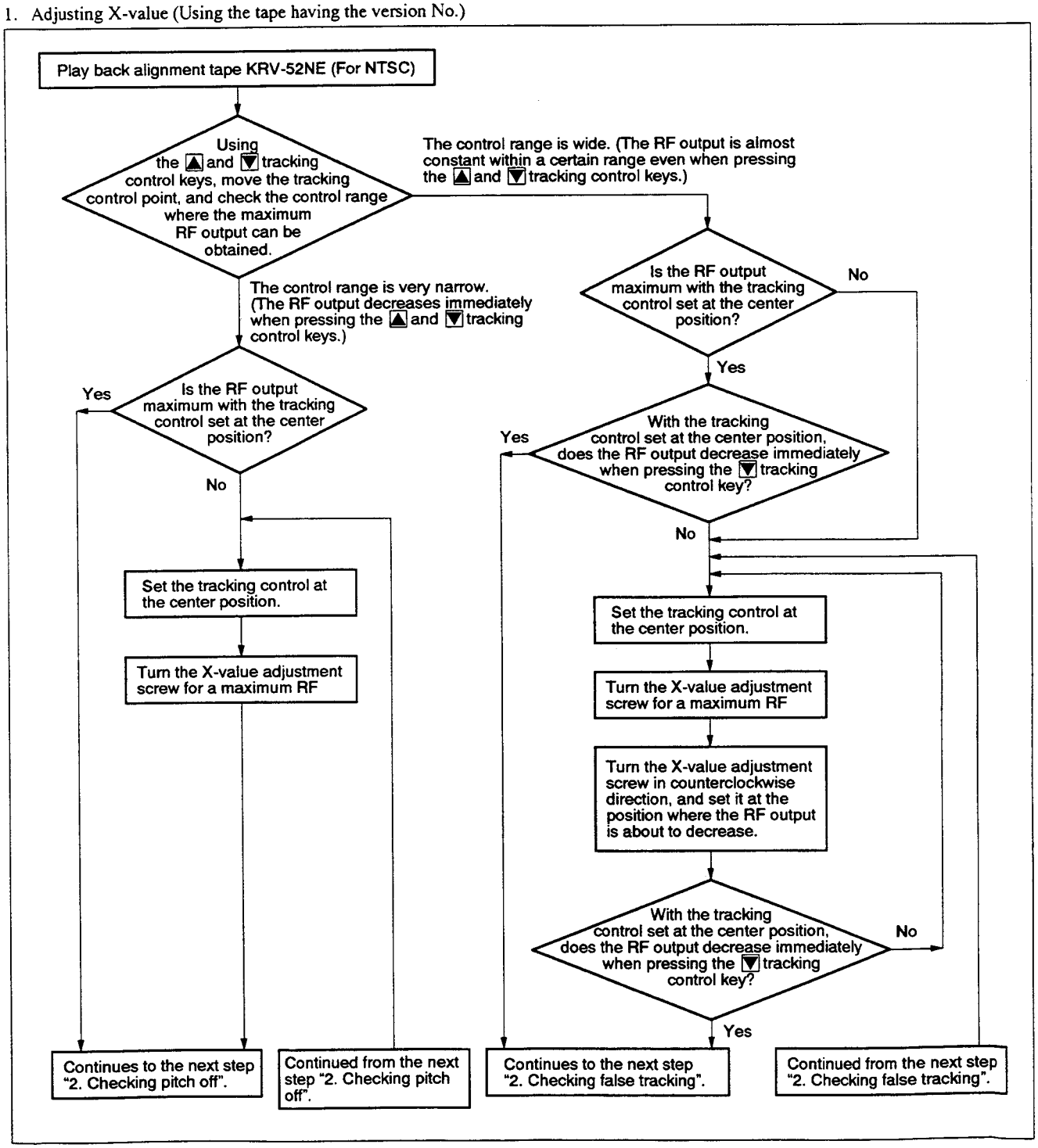

2. Checking false tracking (Using the tape having the version No.)

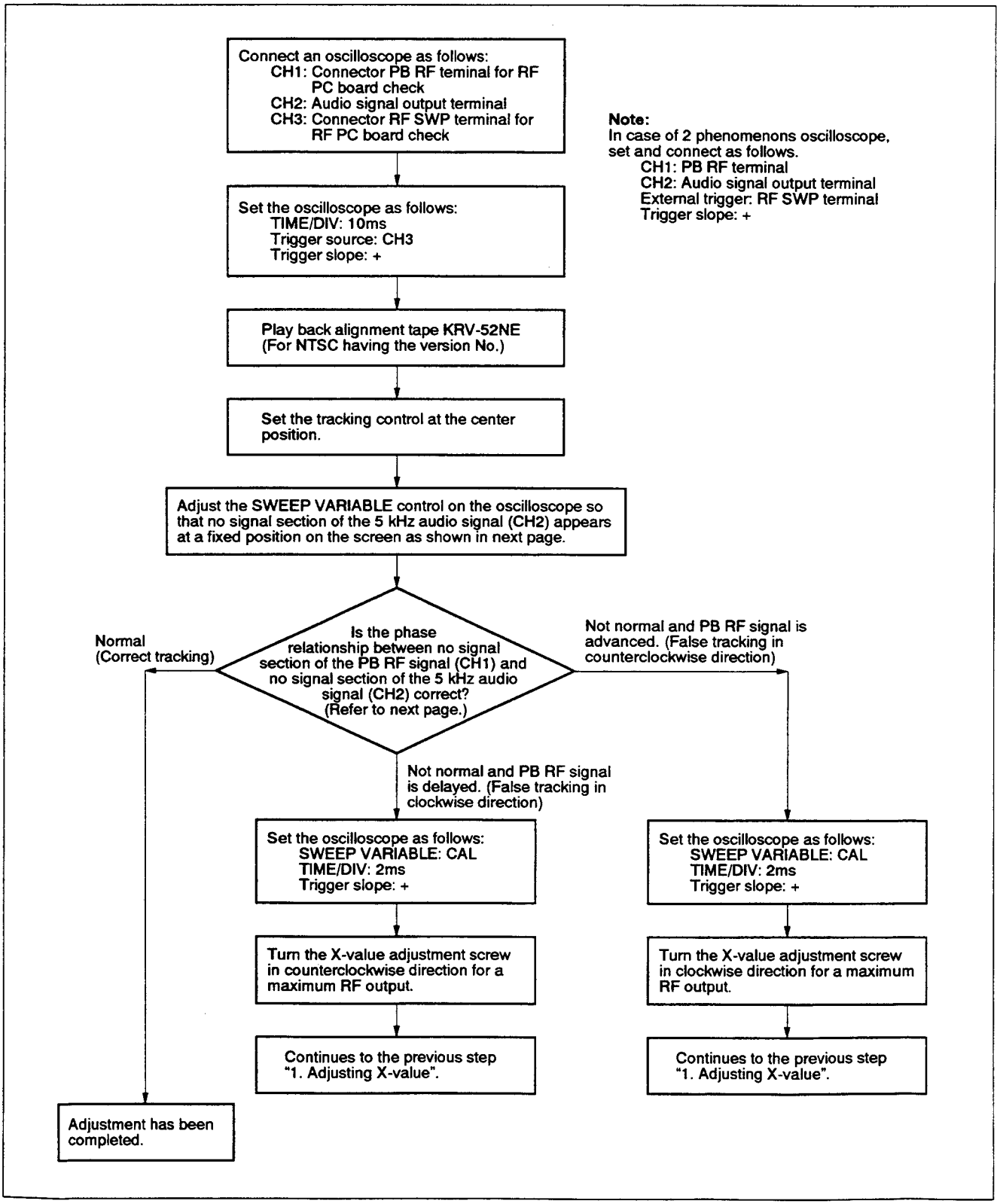

Using the tape having the version No.

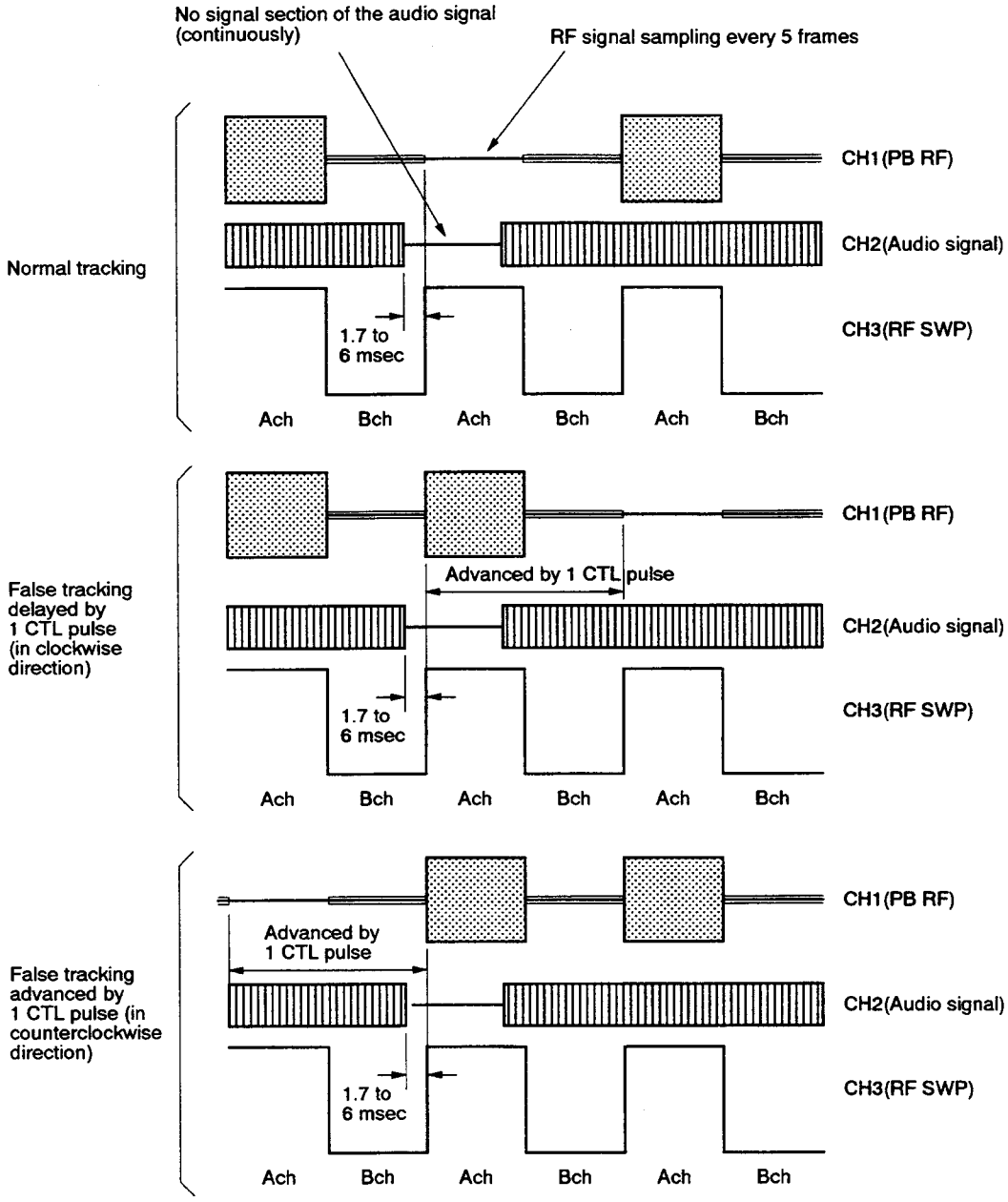

2-3. ADJUSTING THE MECHANISM USING ALIGNMENT TAPE (KRV-52NE for NTSC)

2-3-1. HEIGHT ADJUSTMENT OF GUIDE ROLLERS NO. 3 AND NO. 6

Mode	Playback
Signal	Alignment tape KRV-52NE (For NTSC)
Measuring instrument	Oscilloscope TIM/DIV: 2ms Trigger source: CH2 Trigger slope: +
Measuring point	CH-1: Connector PB RF pin for RF PC board check CH-2: Connector RF SWP pin for RF PC board check
Adjustment locations	Height adjustment screw for No.3 tape guide roller Height adjustment screw for No.6 tape guide roller

[Adjustment Method]

The following adjustment shall be carried out after completed Section 2-1-1 "X-value adjustment and check".

1) Deactivate the automatic tracking control, and set the tracking control at the center position. To set the tracking control at the center position for the VCRs equipped with the ▲ and ▼ tracking control keys, press both the ▲ and ▼ tracking control keys at the same time. For the VCRs not equipped with the tracking control keys, deactivate the automatic tracking control by pressing the tracking AUTO/MANUAL key on the remote control unit during threading operation (after a tape is inserted but before the VCR starts playing back the tape).

2) Check if the RF output changes in amplitude by pressing the tracking control key. The RF output should change periodically (changes from a minimum amplitude to a maximum amplitude, and to the minimum amplitude again).

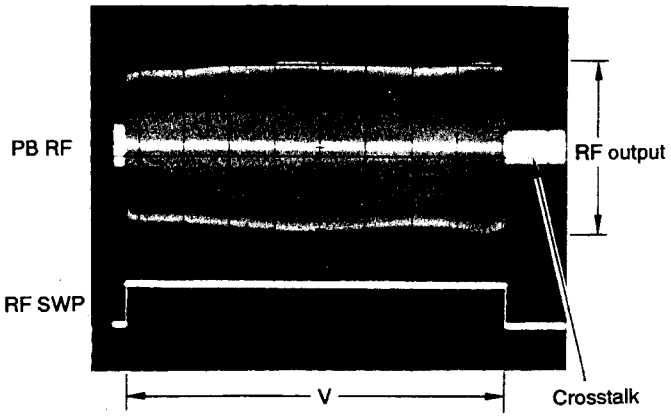

3) Turn the height adjustment screws of tape guide rollers No.3 and No.6 so that the RF output envelope becomes as flat as possible.
4) Press the ▲ tracking control key, and check that both the beginning and end of the RF output change together the same in amplitude.
5) Press the ▼ tracking control key, and check that both the beginning and end of the RF output change together the same in amplitude.

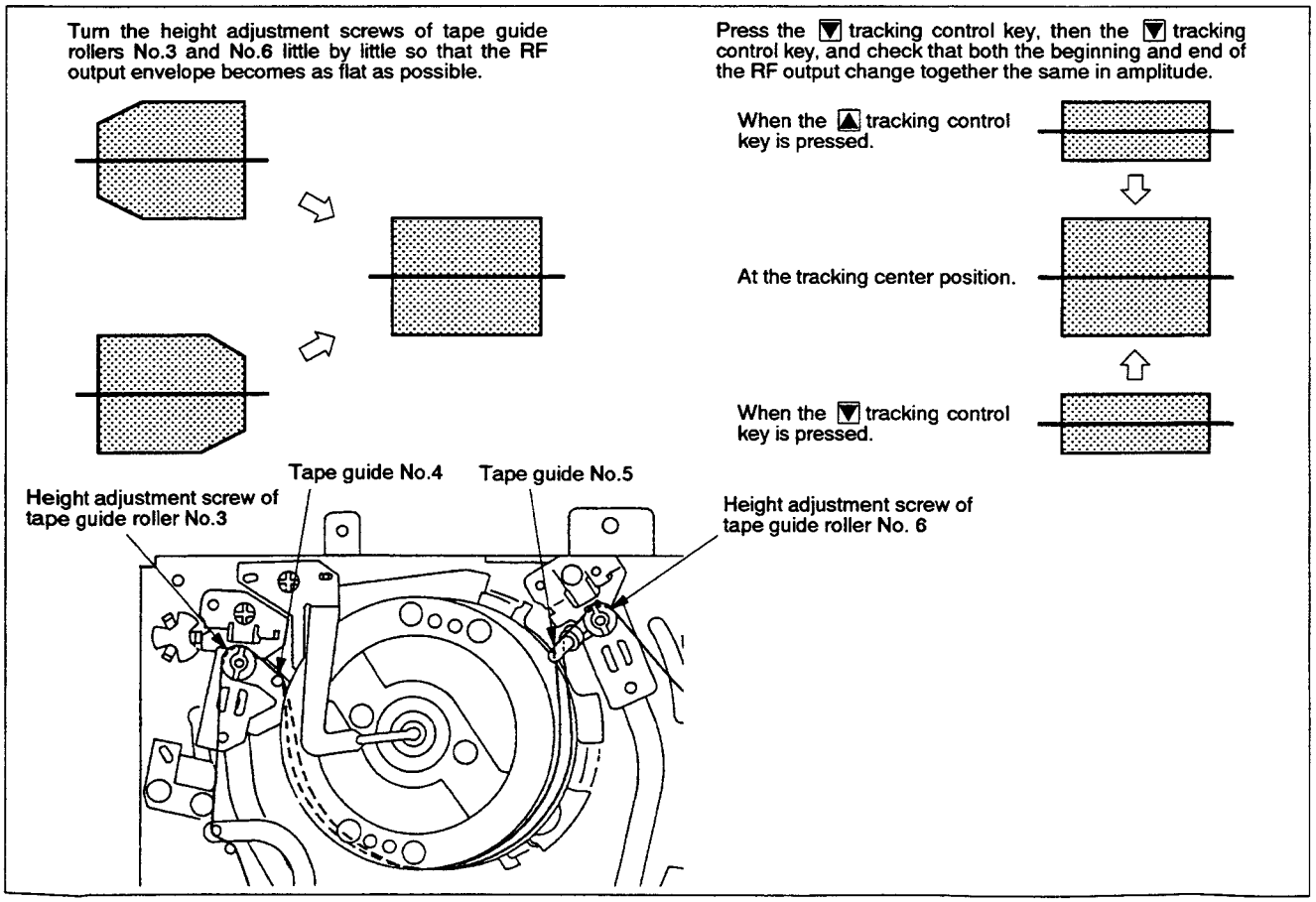

2-3-2. ACE HEAD ASSEMBLY ADJUSTMENT (ROUGH ADJUSTMENT) (Figs. 2-1 and 2-2)

Purpose: Allows the tape to make even contact with the head for recording and playback of the specified track.

Mode	Playback
Jig	Blank tape
Adjustment locations	Height adjuster nut, Tilt adjuster screw

[Adjustment Method]

1) Mount the ACE head assembly. At this time, adjust the height so that the height of guide flange No. 7 matches the level of the lower edge of the control head.
2) Remove the adjustment tool and load a new tape, then set the unit for playback.
3) Check that the tape does not curl or rise up noticeably near the ACE head.
4) If the tape curls up or rises noticeably, readjust the tilt adjuster screw and the height adjuster nut.
   (The height of the ACE head should be adjusted so that the lower edge of the tape is approx. 0.1 to 0.15 mm from the control head.)
5) Perform precision adjustment.

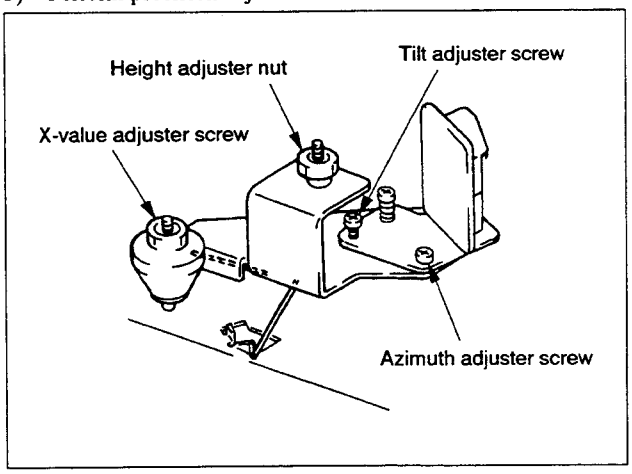

Fig. 2-1

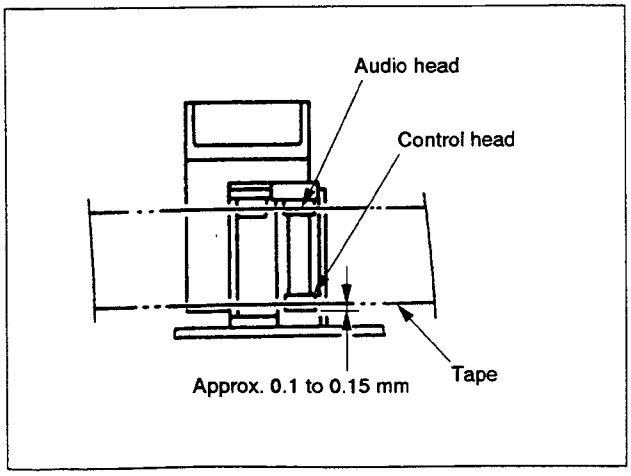

Fig. 2-2

2-3-3. ACE HEAD ASSEMBLY ADJUSTMENT (PRECISION ADJUSTMENT)

Mode	Playback
Signal	Alignment tape (KRV-52NE 5 kHz) (For NTSC)
Measuring instrument	Oscilloscope
Measuring point	Audio output terminal
Adjustment locations	Azimuth adjuster screw, Height adjuster nut, Tilt adjuster screw

[Adjustment Method]

1) Adjust the tilt adjuster screw in the FWD or REV mode so that the lower flange of guide No. 7 does not curl up or rise.
2) Alternately adjust the azimuth adjuster screw, the height adjuster nut, and the tilt adjuster screw to maintain even audio output at maximum with minimum deviation.

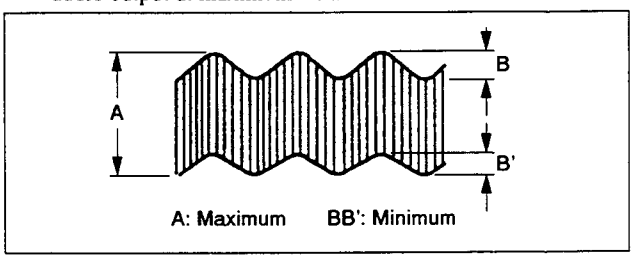

Fig. 2-3

2-3-4. ADJUSTMENTS AFTER REPLACING THE DRUM (VIDEO HEAD)

Purpose: Co-relative height, X-value and other factors of the drum will deviate from those of the guide roller. If the drum is replaced properly, these deviations are extremely small.

Note 1: Deactivate the automatic tracking control for setting the mechanism in manual tracking control mode.

Note 2: To set the tracking control at the center position, deactivate the automatic tracking control by pressing the tracking AUTO/MANUAL key on the remote control unit during threading operation (after a tape is inserted but before the VCR starts playing back the tape).

Mode	Playback
Signal	Alignment tape KRV-52NE (For NTSC), blank tape
Measuring instrument	Oscilloscope
Measuring point	CH-1: Connector PB RF pin for RF PC board check. CH-2: Connector RF SWP pin for RF PC board check.
Adjustment locations	Guide roller (Refer to 2-3-1.) Switching position (Refer to the Service Manual) X-value (Refer to 2-1-1, 2-1-2.)

[Adjustment Method]

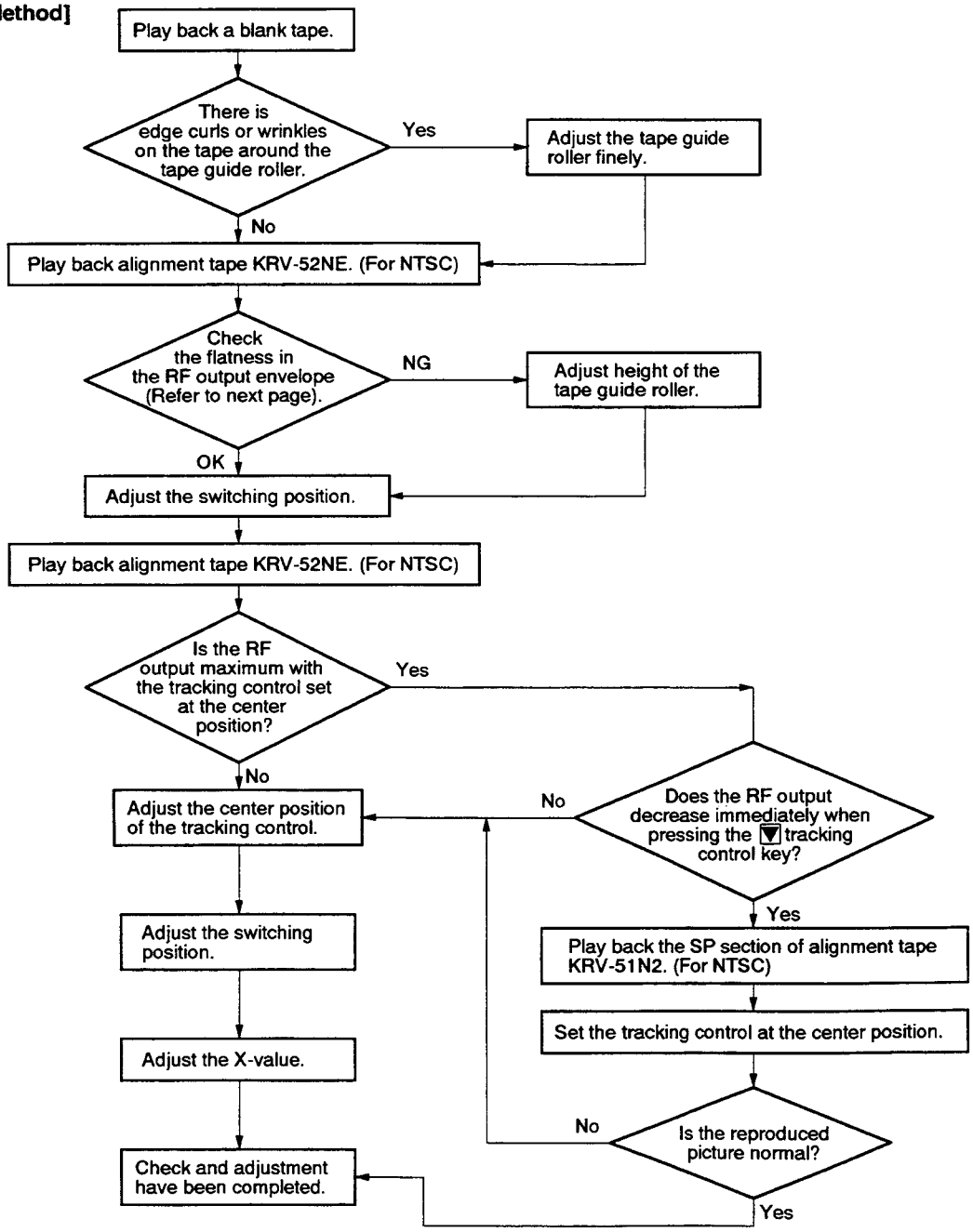

[Checking the evenness and fluctuation of the RF output]

1) Set the RF output to the maximum level using the tracking buttons.

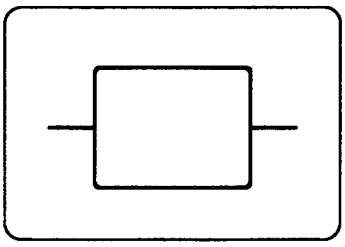

2) Perform fine adjustment of the voltage level range of the oscilloscope, then adjust the RF output deviation to within 4 gradations.

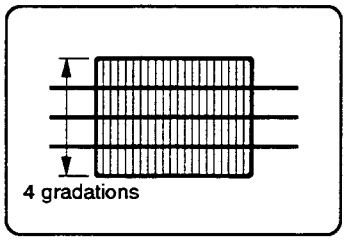

3) Press the tracking buttons and adjust the maximum amplitude of the RF output to within 3 gradations.
4) At this time, check if the minimum amplitude is more than 2 gradations.

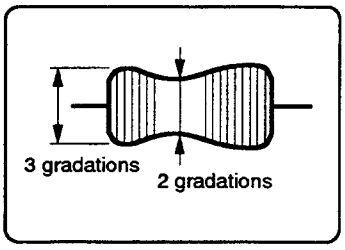

5) Check that the RF output fluctuation between minimum and maximum levels is within 13%.

English
95D05112-1
Printed in Japan
© 1995. 4

Sony Corporation
Consumer A&V Products Company
Home A&V Products Div.

9-973-623-82

Published by Personal A&V Products Div.
Quality Engineering Dept.

VHS MECHANICAL ADJUSTMENT MANUAL IV

SONY®
SERVICE MANUAL

H MECHANISM

SUPPLEMENT-2

File this supplement with the VHS mechanical adjustment IV and supplement-1.

TABLE OF CONTENTS

Section	Title	Page
1.	CORRECTION	1
1-1.	Adjustment Sequence	1
2.	MODIFICATION	2
2-1.	Changing the Recorded Contents of Alignment Tape	2
2-2.	TG2 Roller, FE Head Assembly	2
2-3.	TG3, TG6 Guide Roller Assembly	3
2-4.	TG8 Assembly	4
2-5.	Tension Regulator (TG1) Position Tension Adjustment	5
2-6.	TG8 Guide Roller Height Adjustment	6

1. CORRECTION

In the VHS Mechanism Adjustment Manual IV (Supplement-1), an adjustment sequence was wrong, and it is corrected as follow;

1-1. Adjustment Sequence (VHS Mechanism Adjustment Manual IV (Supplement-1) Page 6 to 11)

(1) Adjustment of No. 3 and No. 6 guide roller height
Delete the "The following adjustment shall be carried out after completed Section 2-1-1 "X-value adjustment and check" under "Adjustment Method" on page 10.

(2) Adjustment of ACE head assembly

Note: In the adjustment of ACE head assembly (coarse adjustment and fine adjustment), if a azimuth, height and tilt were adjusted, again adjust the height of No. 3 and No. 6 guide rollers.

(3) Adjustment of X value

MICROFILM

2. MODIFICATION

2-1. CHANGING THE RECORDED CONTENTS OF ALIGNMENT TAPE

KRV-52NE (NTSC) (Ver. 1.2)

Time	Video	Audio
20 min.	Recording only at 1 MHz, A-ch. EP mode RF skipping once per 5 frames	5 kHz → 4 kHz full tracks

2-2. TG2 ROLLER, FE HEAD ASSEMBLY (Refer to VHS Mechanical Adjustment Manual Ⅳ page14)

- The TG2 roller is provided with either of two types, fixed or straight. For the fixed type, section 3-5 is added.

3-5. TG2 ROLLER, FE HEAD ASSEMBLY (Fig. 3-5)

1) Remove screw ① to pull out FE head assembly ②.

[Note on Mounting]

- Keep clean the surface contacts tape of TG2 roller.

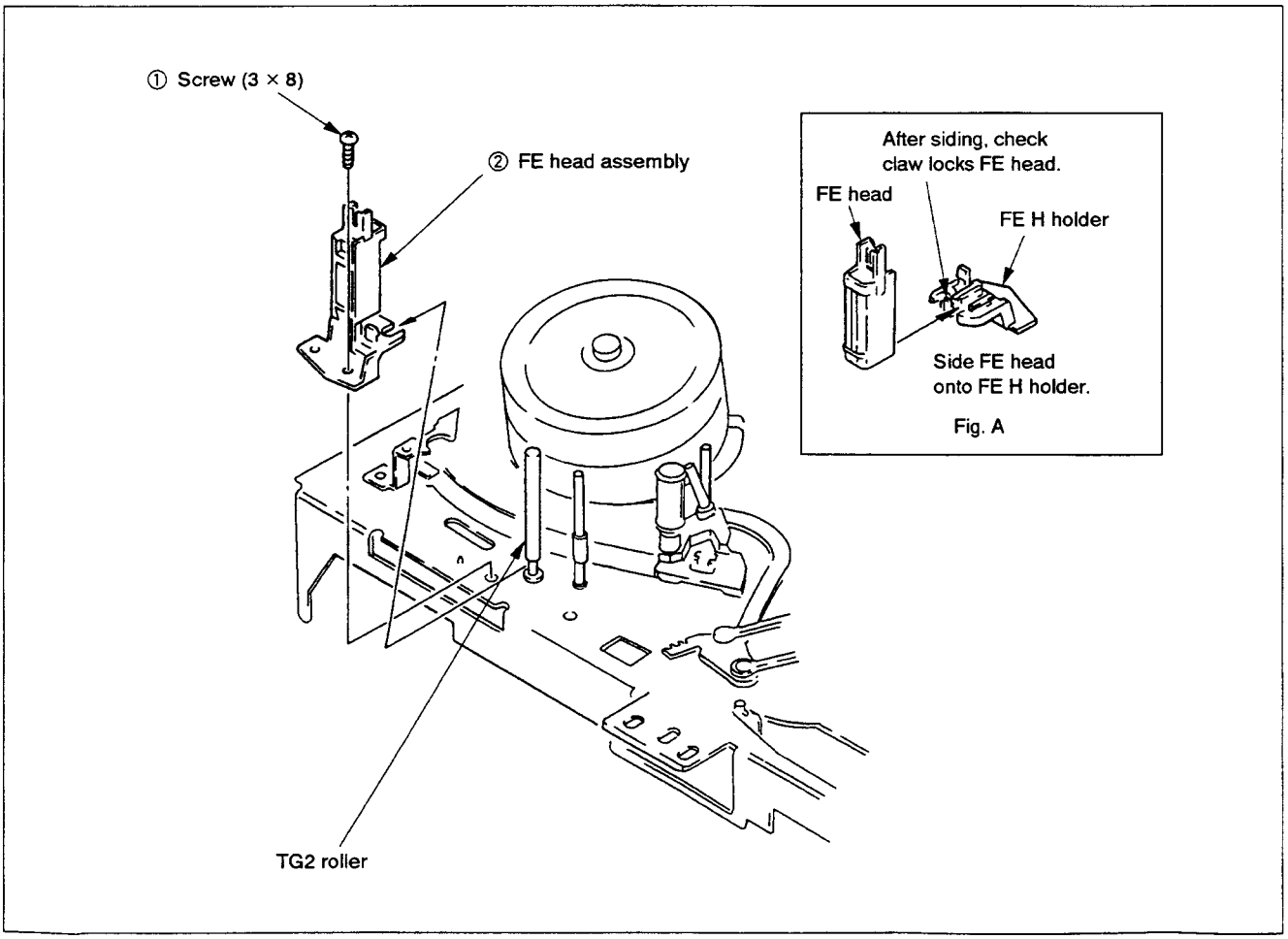

Fig. 3-5

2-3. TG3, TG6 GUIDE ROLLER ASSEMBLIES (Refer to VHS Mechanical Adjustment Manual Ⅳ page 17)

- There is another type in TG3 and TG6 guide roller assemblies, which is not attached with a screw (B2X3). For the screwless type, section 3-8 is added.

3-8. TG3, TG6 GUIDE ROLLER ASSEMBLIES (Fig. 3-8)

1) TG3 guide roller assembly ① by turning it in arrow Ⓐ direction.
2) Removal the spring ②.
3) TG6 guide roller assembly ③ by turning it in arrow Ⓑ direction.
4) Removal the spring ④.

[Note on Mounting]

- Keep clean the surface contacts tape of TG3 and TG6 guide roller assemblies ①, ③.

[Adjustment after Mounting]

- 4-1. Tape path adjustment.

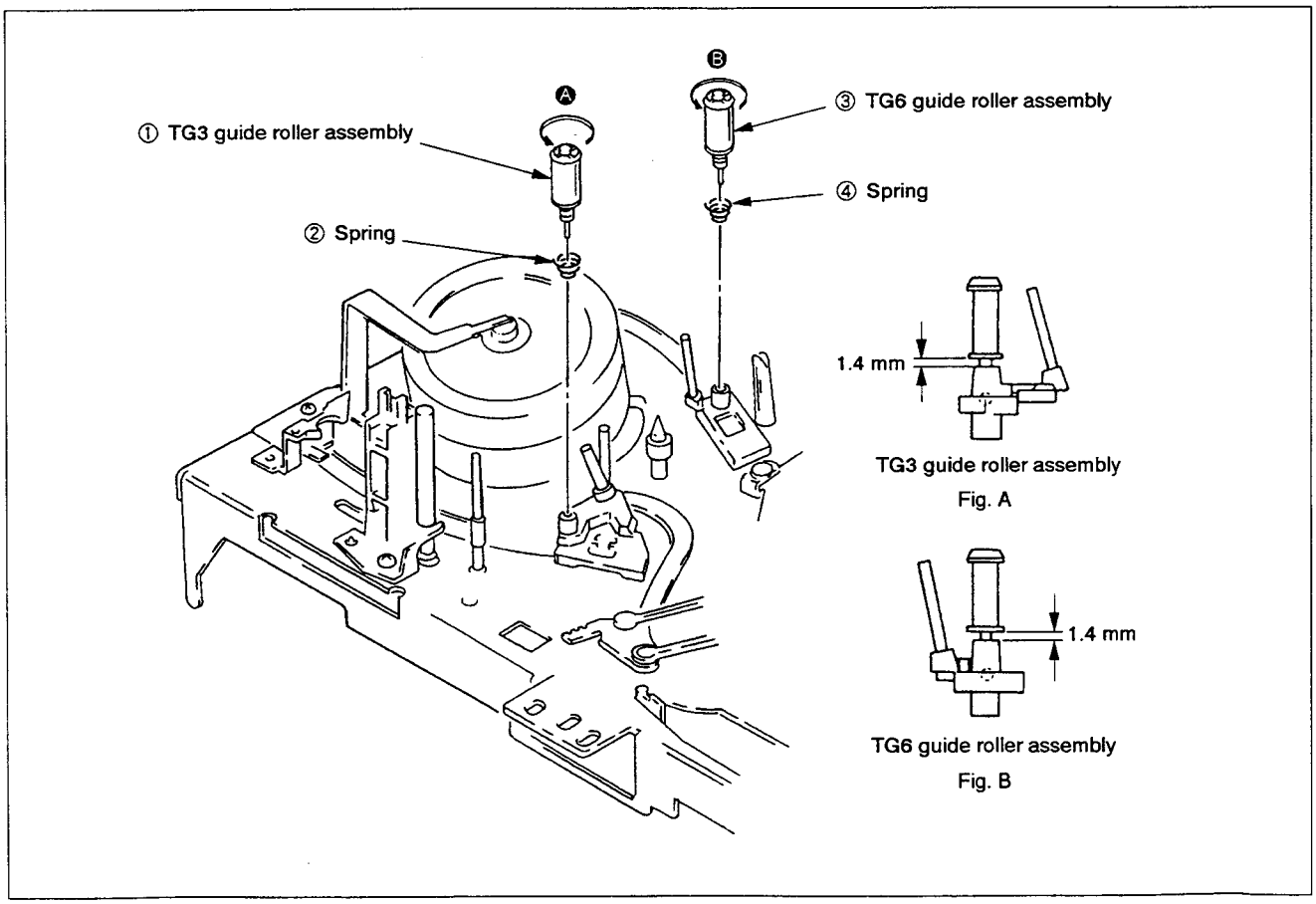

Fig. 3-8

2-4. TG8 ASSEMBLY (Refer to VHS Mechanical Adjustment Manual Ⅳ page 23)

- As the shape of TG8 assembly was changed, Section 3-13 is changed.

☛ : Chenged portion

3-13. TG8 ASSEMBLY (Fig. 3-15)

1) Remove TG7 tape retainer ① to pull out TG8 assembly ②.

[Note on Mounting]

- Apply FLOIL SG-055G (Jig Ref. No. J-12) to ☆ marked portion.
- Keep clean the surface contacts tape of TG8 assembly ②.
- Be careful not to change the shape of TG7 tape retainer ①.
- After attaching the TG7 tape retainer ①, check that side Ⓐ of ① is below side Ⓑ of the stepped-part of the TG7 shaft. (Fig. A)

[Adjustment after Mounting]

- 4-1. Tape path adjustment.

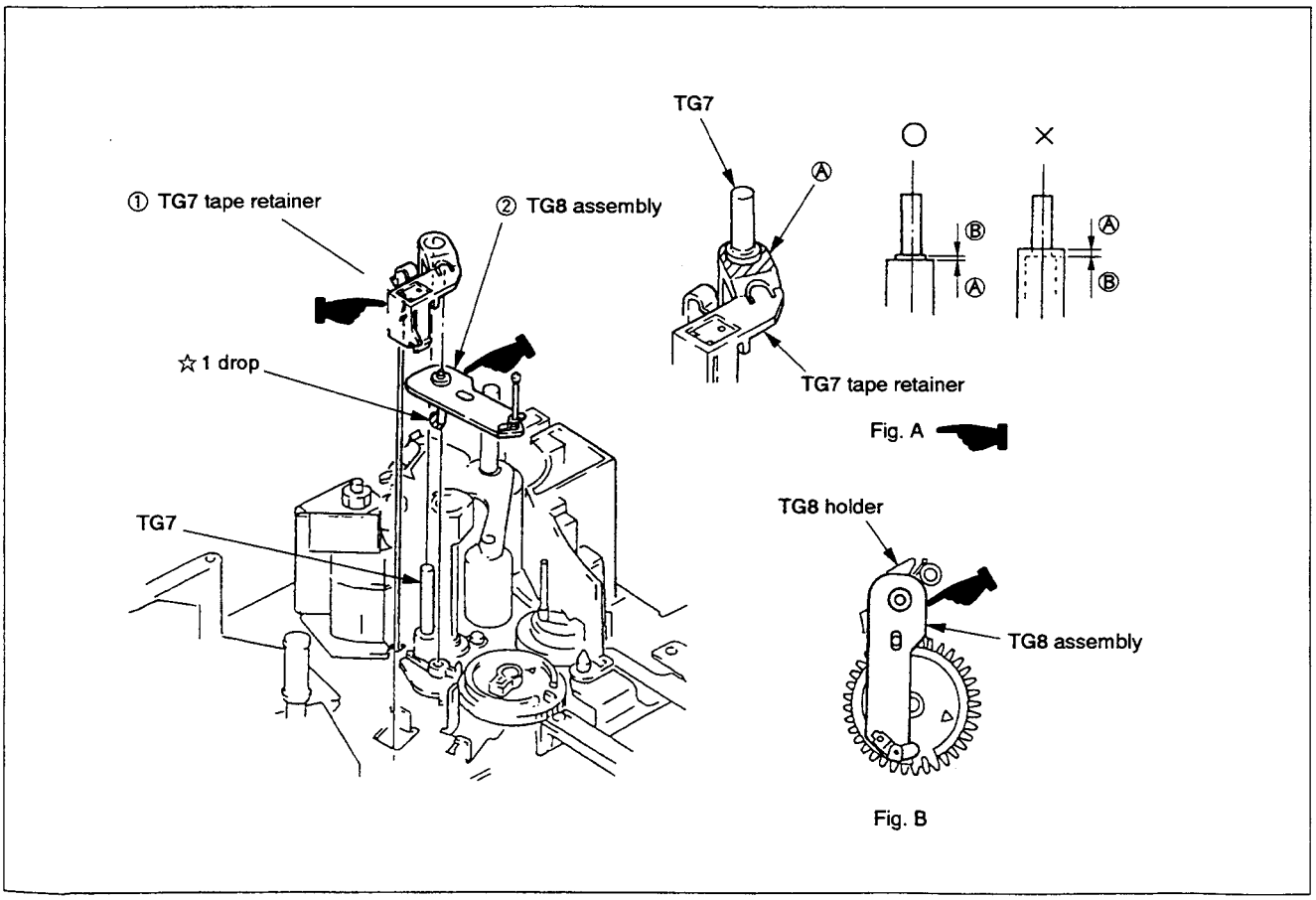

Fig. 3-15

2-5. TENSION REGULATOR (TG1) POSITION/ TENSION ADJUSTMENT (Refer to VHS Mechanical Adjustment Manual Ⅳ page 35)

- As the tension regulator position and tension adjustment were changed, the tension adjustment and Fig. 4-1 are changed.

: Changed portion

• Tension adjustment

Mode	Playback
Measuring instrument/tool	Torque cassette
Adjustment locations	Position for hooking the tension spring
Specified value	34 ± 4 g•cm

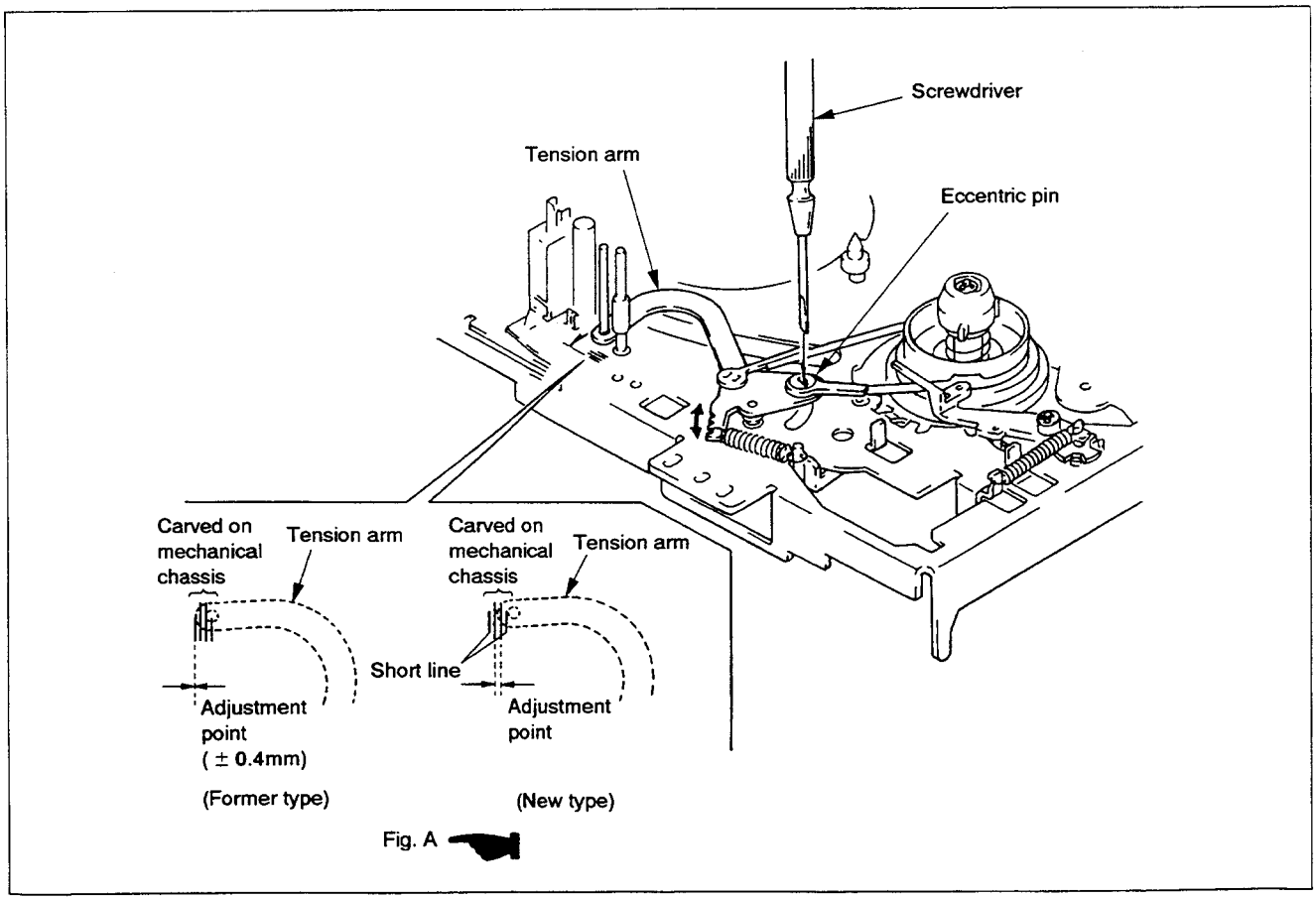

Fig. 4-1

2-6. TG8 GUIDE ROLLER HEIGHT ADJUSTMENT (Refer to VHS Mechanical Adjustment Manual IV page 36)

- As the use of TG8 height adjusting screw was cancelled, section 4-1-2 is changed.

4-1-2. TG7 TAPE PATH ADJUSTMENT (Fig. 4-2)

[Adjustment Method]

1) Load a tape, and playback the tape in the CUE mode, confirm the distance between lower flange of No. 7 guide roller and lower side of tape (Fig. A).
2) Then, feeding the tape in the REV mode, confirm the distance between lower flange of No. 7 guide roller and lower side of tape.
3) If the tape height in the REV feed is higher that in the CUE playback (Fig. B), rotate the ACE head flapping adjust screw in the direction Ⓐ so that a difference in tape height between CUE mode and REV mode becomes zero.
4) If the tape height in the REV feed is lower that in the CUE playback (Fig. C), rotate the ACE head flapping adjust screw in the direction Ⓑ so that a difference in tape height between CUE mode and REV mode becomes zero.

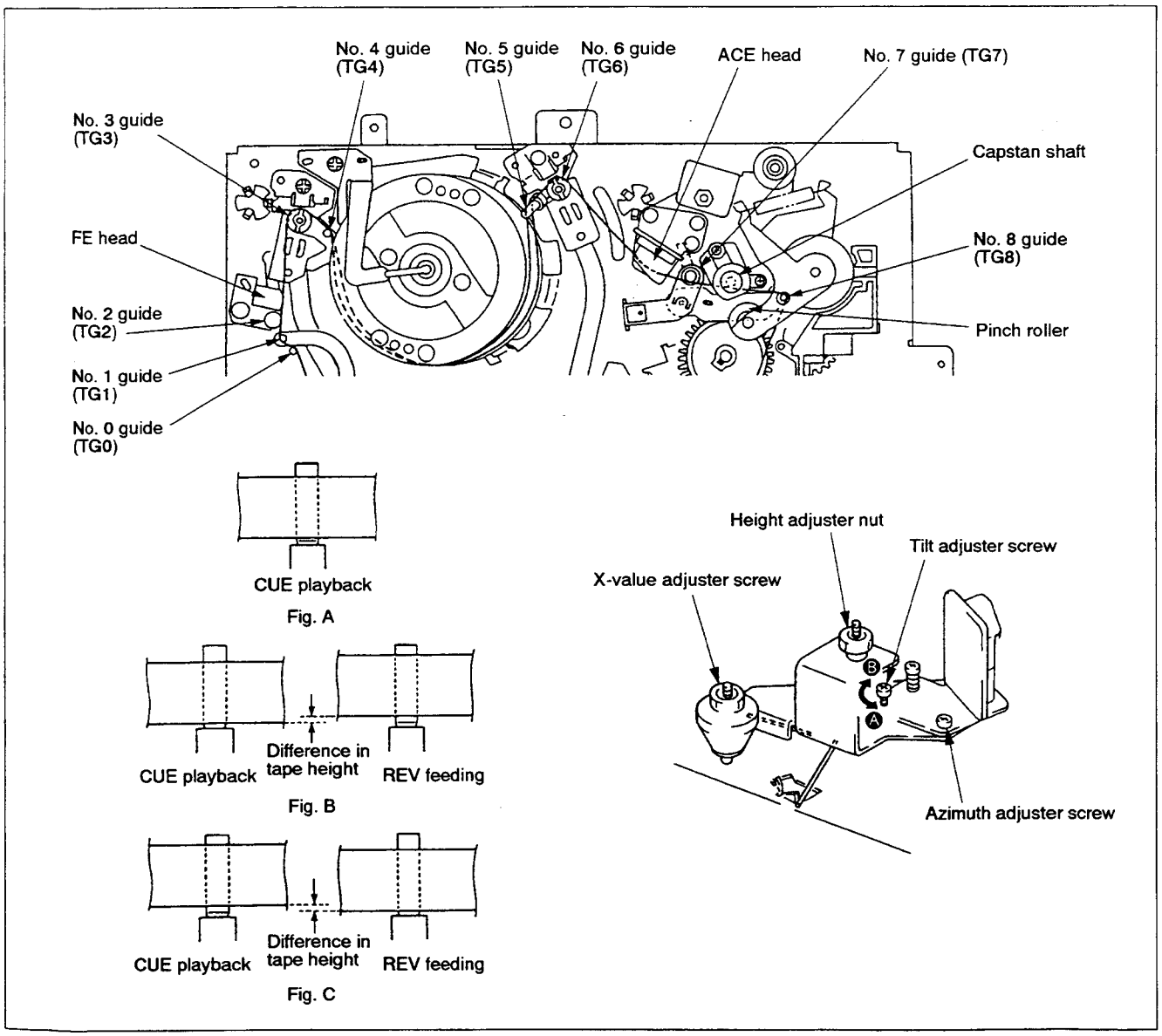

Fig. 4-2

English
95H05103-1
Printed in Japan
© 1995. 8

Sony Corporation
Consumer A&V Products Company
Home A&V Products Div.

9-973-623-84

Published by Personal A&V Products Div.
Quality Engineering Dept.